G137 & G139

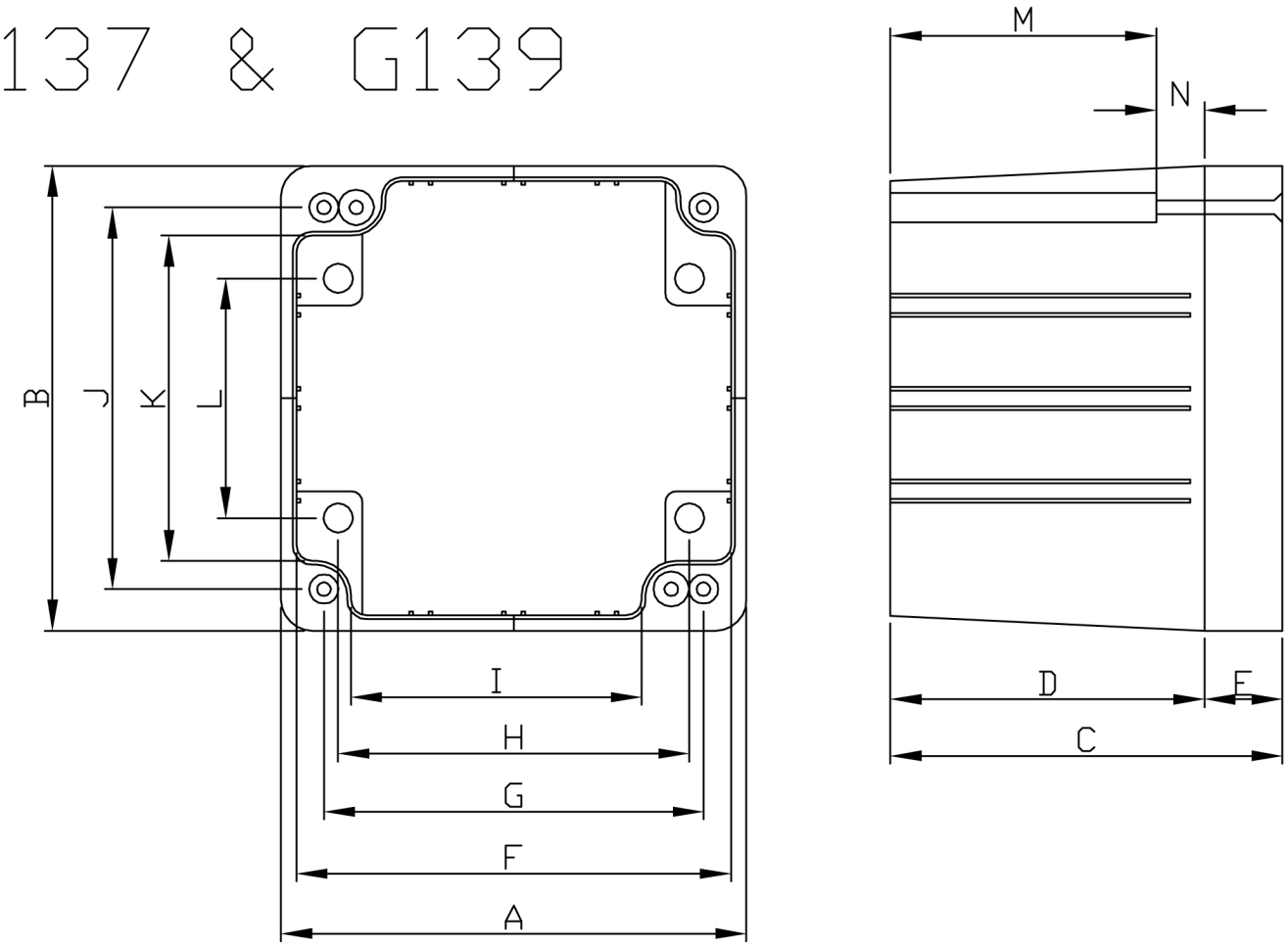

PART NO.	A	B	C	D	E	F	G	H	I	J	K	L	M	N
G137	120.5	120.5	101.5	81.3	20.2	113.7	84.1	57.1	86.2	84.1	87.4	57.1	65.4	15.7
G139	158.5	158.5	101.5	138.3	20.2	151.7	139.7	108.7	117.2	139.7	125.5	108.7	65.4	15.7