General Safety Instructions:

READ SAFETY INSTRUCTIONS

Servicing:
These products are not customer serviceable. TDK-Lambda UK LTD. and their authorised agents only are permitted to carry out repairs.

Critical Components:
These products are not authorised for use as critical components in nuclear control systems, life support systems or equipment for use in hazardous environments without the express written approval of the Managing Director of TDK-Lambda EMEA.

Product Usage:
These products are designed for use within a host equipment which restricts access to authorised competent personnel.

Environmental:
These products are IPX0, and therefore chemicals/solvents, cleaning agents and other liquids must not be used.

Environment:
This power supply is a switch mode power supply for use in applications within a Pollution Degree 2, overvoltage category II environment. Material Group IIIb PCB's are used within it.

Output Loading:
The output power taken from the power supply must not exceed the rating stated on the power supply label, except as stated in the product limitations in this handbook.

Input Parameters:
This product must be operated within the input parameters stated in the product limitations in this handbook.

End of Life Disposal:
The unit contains components that require special disposal. Make sure that the unit is properly disposed of at the end of its service life and in accordance with local regulations.

HOT SURFACE

External Hot Surfaces:
In accordance with local regulations for Health and Safety at work, manufacturers have an obligation to protect service engineers as well as users. In order to comply with this, a label must be fitted to these products which is clearly visible to service personnel accessing the overall equipment, and which legibly warns that surfaces of these products may be hot and must not be touched when the products are in operation.

.
General Safety Instructions:

The (+) or (-) output(s) can be earthed or left floating.

A suitable mechanical and fire enclosure must be provided by the end use equipment for mechanical and fire hazard protection.

Environmental Specifications:

Description	Operation	Storage
Use	Indoor	-
Temperature	See product data below	See product data below
Humidity	5 to 95% RH, non-condensing	5 to 95% RH, non-condensing
Pressure	70kPa - 106kPa	54kPa - 106kPa
Shock	MIL-STD-810F	
Vibration	MIL-STD-810F	

Product data:

Product	Operation temperature without derating	Operation temperature with derating *
DPX15W Series	-40℃ to +85℃	+85℃ to +95℃
DPX20	-40℃ to +76℃	+76℃ to +94℃
DPX20W Series	-40℃ to +78℃	+78℃ to +91℃
DPX30	-40℃ to +70℃	+70℃ to +94℃
DPX30W Series	-40℃ to +67℃	+67℃ to +90℃
DPX40	-40℃ to +69℃	+69℃ to +90℃
DPX40W Series	-40℃ to +66℃	+66℃ to +87℃
DPX60	-40℃ to +60℃	+60℃ to +85℃

* With derating (see product datasheet for derating curves).

Storage temperature all DPX: -40℃ to +105℃

Isolation voltage

Dielectric Strength testing is carried out as follows:
Input to output: 1600Vdc
Input (Output) to chassis: 1600Vdc

Safety Approvals:

CE marking when applied to any **DPX** product, indicates compliance with the Low Voltage Directive (2006/95/EC) in that it complies with EN60950-1: 2nd Edition

Fusing: See input parameters table below

Symbols:

DC **EARTH**

Nomenclature: [
DPX models as described below:
Unit Configuration Code: DPXa-bcde-f
Where:

a	=	Power rating (15, 20, 30,40 or 60).
b	=	Nominal input voltage (12, 24 or 48)
c	=	Input range, 2:1 omit designation: (for 12V nom: 9-18Vdc, for 24V nom: 18-36Vdc and for 48V nom: 36-75Vdc). Input range, 4:1 'W' designation: (for 24V nom: 9.5-36Vdc and for 48V nom: 18-75Vdc).
d	=	Number of outputs: S = single output, D = dual output, T = Triple output
e	=	Output voltage (3P3, 05, 5P1, 12, 15, ±5, ±12 or ±15)
f	=	Omit for Positive Logic Remote ON/OFF "N" for Negative Logic Remote ON/OFF

Input Parameters:

		2 :1 Input models			
Model	Nominal Input Voltage	Input range	Max Input current	Input Fuse	Fuse type
DPX20	12Vdc	9.5 – 18 VDC	2119mA	6A	Slow blow
	24Vdc	18 – 36 VDC	1031mA	4A	
	48Vdc	36 – 75 VDC	513mA	4A	
DPX30	12Vdc	9.5 – 18 VDC	3165mA	6A	Slow blow
	24Vdc	18 – 36 VDC	1543mA	4A	
	48Vdc	36 – 75 VDC	762mA	4A	
DPX40	12Vdc	9.5 – 18 VDC	4675mA	8A	Slow blow
	24Vdc	18 – 36 VDC	2250mA	4A	
	48Vdc	36 – 75 VDC	1111mA	4A	

		4 :1 Input models			
Model	Nominal Input Voltage	Input range	Max Input current	Input Fuse	Fuse type
DPX15W	24Vdc	9.5 – 36 VDC	787mA	6A	Slow blow
	48Vdc	18 – 75 VDC	387mA	4A	
DPX20W	24Vdc	9.5 – 36 VDC	1043mA	6A	Slow blow
	48Vdc	18 – 75 VDC	515mA	4A	
DPX30W	24Vdc	10 – 40 VDC	1623mA	6A	Slow blow
	48Vdc	18 – 75 VDC	791mA	4A	
DPX40W	24Vdc	9.5 – 36 VDC	2110mA	8A	Slow blow
	48Vdc	18 – 75 VDC	1042mA	4A	

Input Connections: Screw terminal, use wire gauge 14 to 18AWG

Output Parameters:

DPX models

Output designation	Vout
S3P3	3.3Vdc
S5P1	5.1Vdc
S05	5Vdc
S12	12Vdc
S15	15Vdc
D05	±5Vdc
D12	±12Vdc
D15	±15Vdc

Not all outputs are available in all power ranges.
For additional output parameters see specific product datasheet

Adjusting output voltage beyond the stated range may cause overvoltage protection (OVP) to operate, whereby the output will latch off. To reset for normal operation simply adjust the potentiometer to reduce the output voltage to within its range and cycle the input off then on.

If the total voltage of outputs connected in series exceed the 60Vdc SELV limit then all outputs must be considered non-SELV.

Non-SELV outputs are hazardous and must not be made user accessible. They must be guarded or a deflector fitted during installation to avoid a service engineer making inadvertent contact with the output terminals, or dropping a tool onto them.

All outputs have operational spacings to earth, and due consideration must be given to this in the end product design.

Functional block diagram

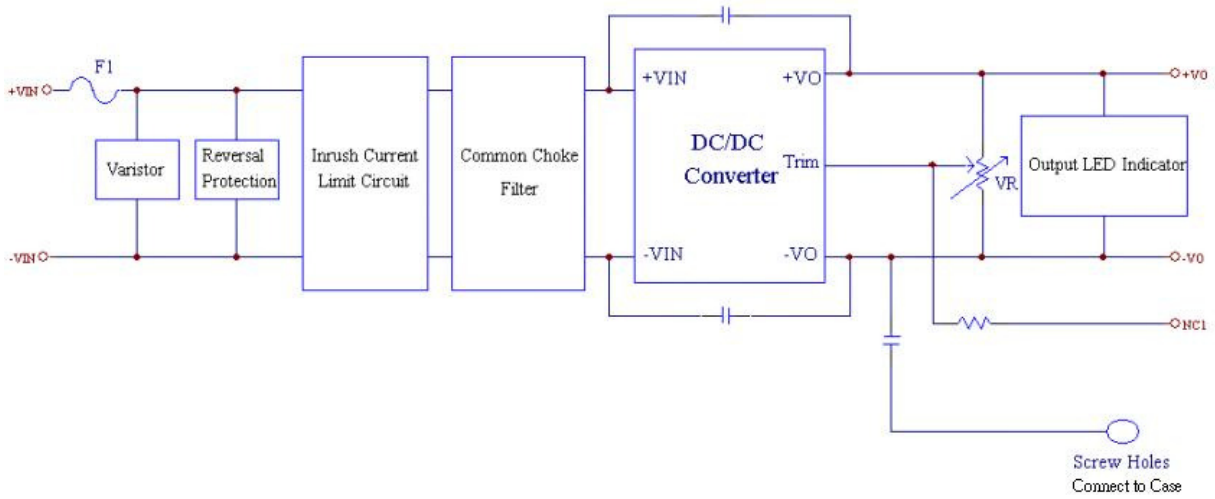

Cooling for unit

The unit must be mounted on a DIN rail and must not be inverted, the output connection uppermost.

Installation orientation:

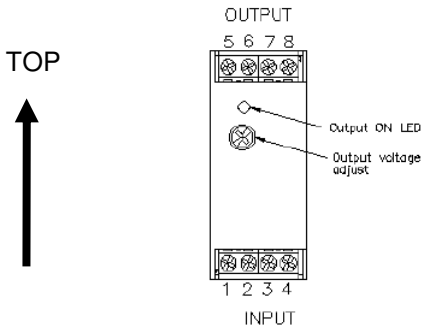

The ventilation openings on these products must not be impeded. Ensure that there is at least 50mm spacing between any obstruction and the ventilation openings.

The unit cover/chassis is designed to protect skilled personnel from hazards. They must not be used as part of the external covers of any equipment where they may be accessible to operators, since under full load conditions, part or parts of the unit chassis may reach temperatures in excess of those considered safe for operator access.

Ventilation slots located top and bottom of product

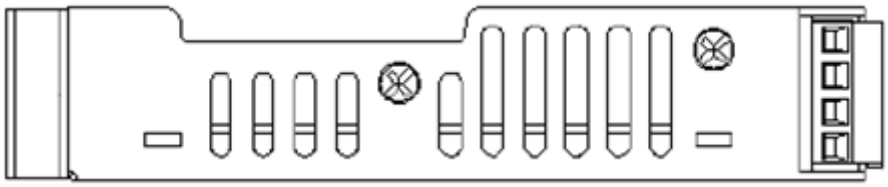

Higher temperature limits (in brackets) may be used but product life may be reduced.

EMC Performance:

Test	Standard	Passed	Comments	Criteria
Conducted emissions	EN55022	Class B		
Electrostatic discharge	EN61000-4-2	Level 3 Level 2	Air discharge 8kV Contact discharge 6kV	A A
Electromagnetic field	EN61000-4-3	Level 3	Tested to 10V/m	A
Fast / burst transient AC Input	EN61000-4-4	Level 3	Tested to 2kV	A
Surge immunity	EN61000-4-5	Level 3	Common mode to 1kV	A
Conducted RF immunity	EN61000-4-6	Level 3	Tested 10Vr.m.s	A

Mechanical Drawings:

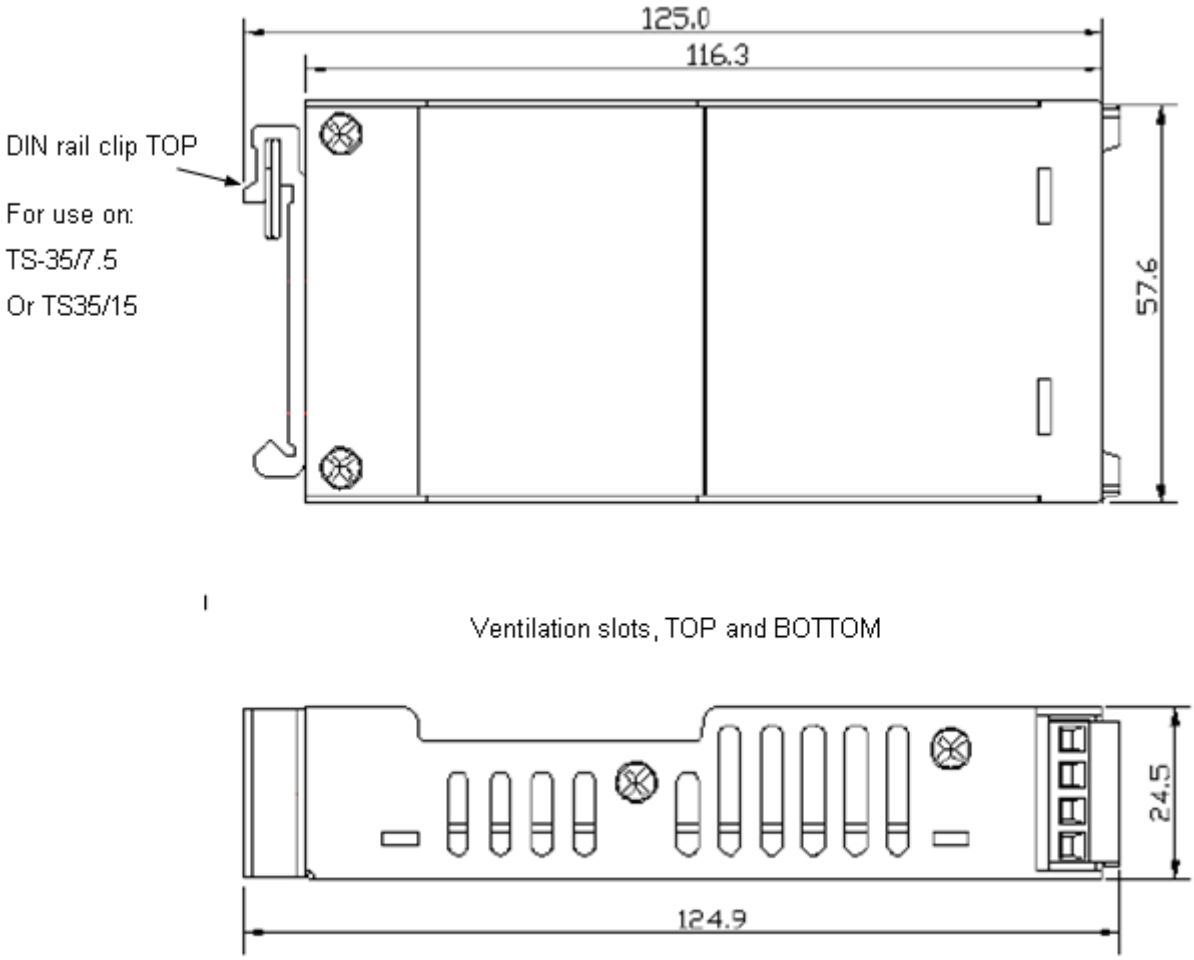

Dimensions shown in mm

Figure 2.

TDK·Lambda
TDK-Lambda UK Ltd
Kingsley Avenue, Ilfracombe
Devon, EX34 8ES
Telephone - Sales and Service +44 (0)1271 856666
Head Office and Works +44 (0)1271 856600
Facsimile +44 (0)1271 864894
WEBSITE: www.uk.tdk-lambda.com