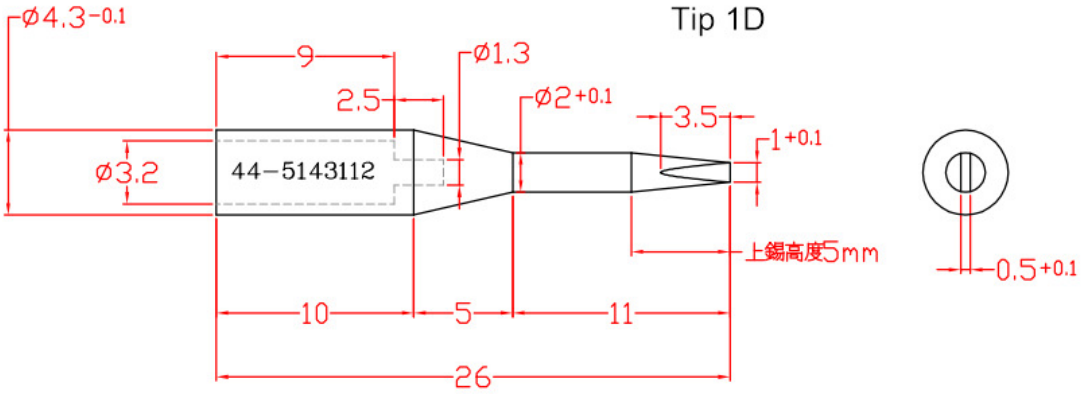
Tip 1D
Ø4.3-0.1
9
Ø1.3
2.5
Ø2+0.1
3.5
1+0.1
Ø3.2
44-5143112
上錫高度5mm
0.5+0.1
10
5
11
26

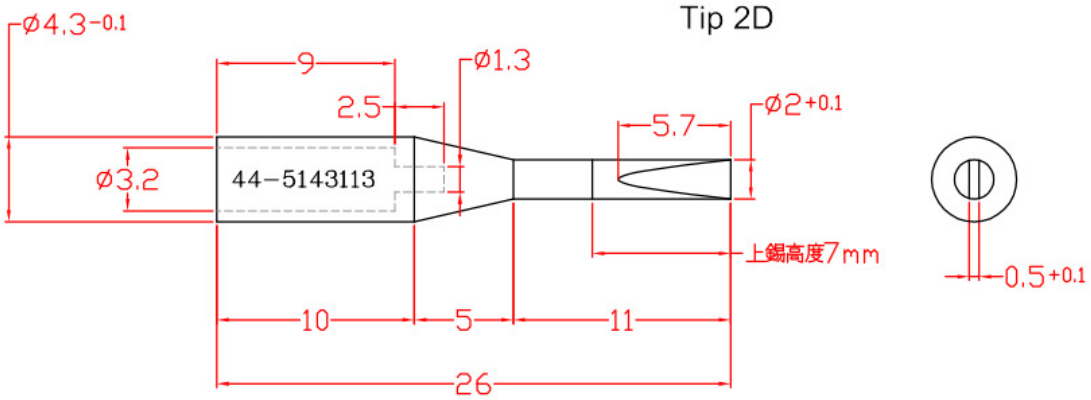
Tip 2D
Ø4.3-0.1
9
Ø1.3
2.5
5.7
Ø2+0.1
Ø3.2
44-5143113
上錫高度7mm
0.5+0.1
10
5
11
26

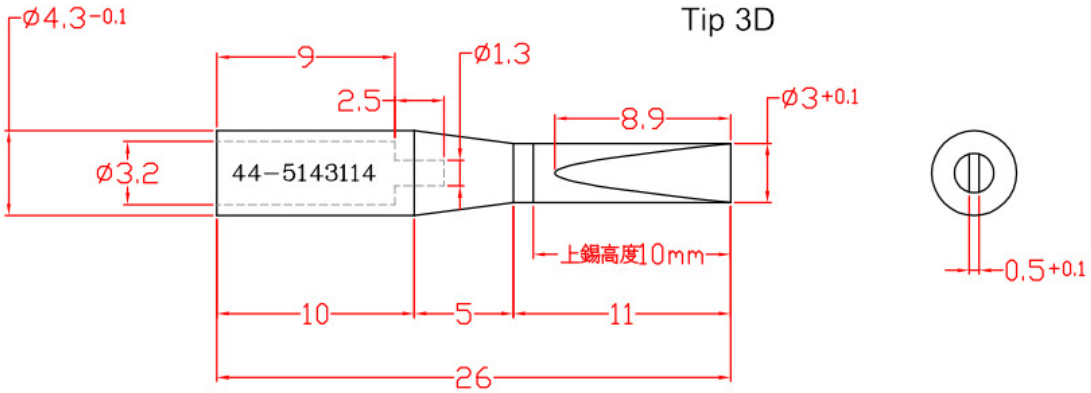
Tip 3D
Ø4.3-0.1
9
Ø1.3
2.5
8.9
Ø3+0.1
Ø3.2
44-5143114
上錫高度10mm
0.5+0.1
10
5
11
26

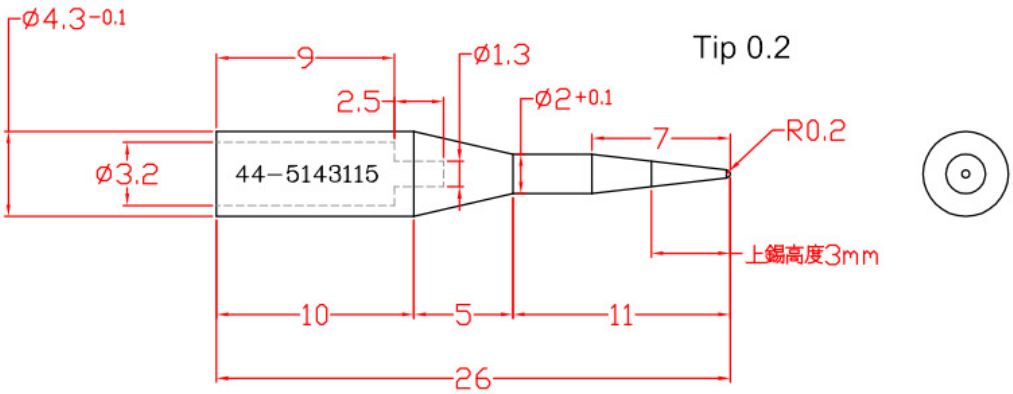
Tip 0.2
Ø4.3-0.1
9
Ø1.3
2.5
Ø2+0.1
7
R0.2
Ø3.2
44-5143115
上錫高度3mm
10
5
11
26