The supplier acknowledges that, with the acceptance of the drawing, he is in a position to manufacture the illustrated part in accordance with the drawing in reproducible from and series production. Through the selected manufacturing processes no properties will arise in the delivered part which adversely affect the function or impairment of the component. Verbal agreements over and above that are not valid. Deviations from this rule must be writing and must be signed by the purchaser.

This drawing may not be copied, reproduced or made available to third parties in any way whatsoever without or prior written approval.

Technische Daten/ technical data	:	Akkupack/ batterypack
Chemie/ chemistry	:	Lithium Ion
Zellenzahl/ no. of cells	:	3 Zellen/ cells ; 1S3P
Zellentypl/ cell type	:	INR18650 LGC MJ1
Kapazität/ capacity	:	nom. 10500mAh discharge at 0.2C min. 10050mAh discharge at 0.2C ta:20°C; EV(Discharge End Voltage): 2.5V per cell
Innenwiderstand/ impedance	:	< 100mOhm (battery and safetyboard)
Nominalspannung/ nominal voltage	:	3.635V
Standard Ladespannung/ standard charge voltage	:	4.2V±1%
Standard Entladespannung/ standard discharge voltage	:	2.5V
Nominaler Ladestrom/ nominal charge current	:	3000mA (limited by safetyboard)
Maximaler Ladestrom/ maximum charge current	:	3000mA (limited by safetyboard)
Ladeendstrom/ charge end current	:	0.01C recommended
Maximaler Entladestrom/ maximum discharge current	:	3000mA (limited by safetyboard)
Anwendungstemperaturbereich/ ambient temperature range	:	0°C...+45°C charge -20°C...+60°C discharge -20°C...+30°C storage max. 1 year -20°C...+45°C storage max. 3months
Selbstentladung/ self discharge	:	≤ 5% / month at20°C ≤ 10% / month at30°C ≤ 20% / month at40°C
Standards/	:	UN 3480, Subsection 38.3 All cells and batterypacks type tested according to UN manual of test and criteria subsection 38.3

Technische Daten/ technical data	:	Sicherheitsschaltung/ safety board (0180-3202)	
Überladeschutzspannung/ over charge voltage detection	:	4.325V±0.05V	per cell
Wiedereinschaltspannung/ over charge release voltage	:	4.075V±0.1V	per cell
Entladeabschaltspannung/ over discharge detection voltage	:	2.5V±0.1V	per cell
Wiedereinschaltspannung/ over discharge release voltage	:	2.9V±0.1V	per cell
Nominaler Lade/Entladestrom/: nominal operating current	:	3A	
Entlade Abschaltstrom/ discharge cut off current	:	8.5A± 2A	
Kurzschlussschutz/ short circuit protection	:	gegen äußeren Kurzschluss/ against external short circuit	
Temperarurschalter/ temperature switch	:	PTC : JK-P450 20V/4.5A at 25°C; 3.9A at 40°C	
MOSFET	:	in Masse in Gnd	
Rückstellkriterium/ release condition	:	Last trennen, Aktiv nach Anladen/ cut load, release after charging up	
Leiterplattenmaterial/ pcb material	:	FR4	
Nettogewicht/ net weight	:	148.4g	
Standards	:	CE, UKCA	

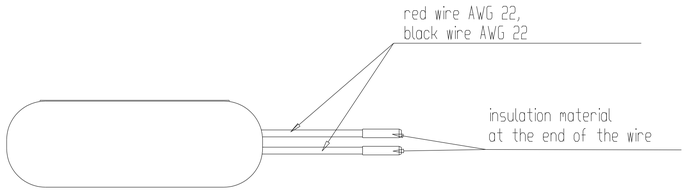

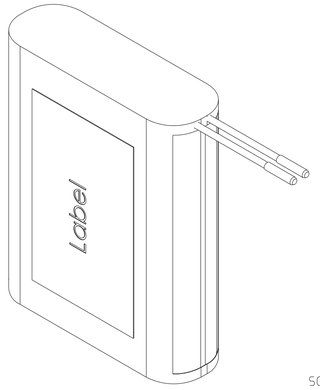

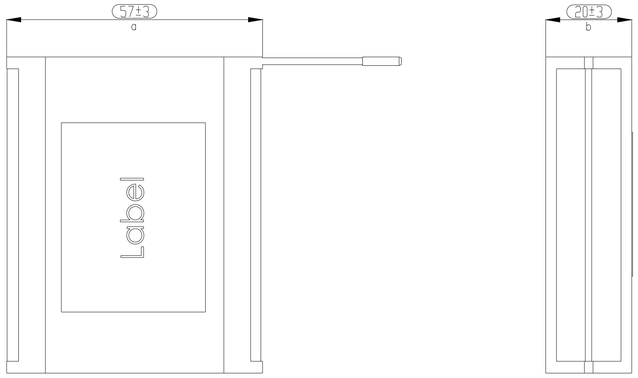

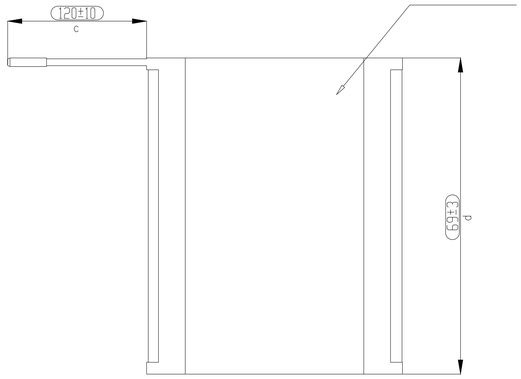

batterypack covered with 2 layers of blue shrinktube

Part Number	SAP Description
2447-3034-20	Li-Ion-3.63V-10500mAh-1S3P-PTC/LG
2447-3034-220	Li-Ion-3.63V-10500mAh-1S3P-PTC/UK

Version	Change	Date	Name
V6	standards updated	09.06.2021	DS
V5	change request: DE-20-5013	17.02.2020	MSt
V4	part number overview added	15.04.2019	DS
V3	dimensions changed	13.04.2018	DS
V2	cable length changed	16.01.2018	DS
V1	change request DE-17-0071	14.11.2017	DS
V0	created this D/S	07.11.2016	JX

	Date	Name
Drawn by	07.11.2016	JX
Changed by		

Allowable deviation general tolerances: DIN ISO 2768-m

Surface:

Material:

Weight

Scale (DIN A2): 1:1

Projection method: 1

Product name:

Li-Ion-3.63V-10500mAh-1S3P-PTC/LG

Part number: **2447-3034-X20**

Project: **IS-01263**

Application range for inquiry: **XXX/XX**

Sheet: 1/1