USB Connectors
USB 3.0 Sockets Type A

SMT, with retaining clips

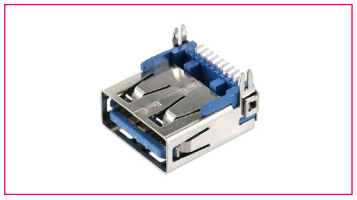

SPECIFICATION:

Operating Current (Nom.):	1.5 A
Operating Temperature:	-40°C to 85°C
Insulation Resistance (Min.):	1000 MΩ
Contact Resistance (Max.):	30 mΩ
Dielectric Strength:	500 Vac
Insertion Force (Max.):	35 N
Extraction Force:	10 N

MATERIAL:

Material (Terminal):	copper alloy, tin plated
Material (Housing):	metal, nickel plated
Flammability Class:	UL 94 V-0
Material (Insulation):	LCP
Material (Contact Area):	copper alloy, gold plated

HANDLING:

Packaging:	tray

TOLERANCE:

.X:	± 0.25
.XX:	± 0.20

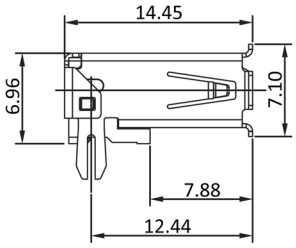

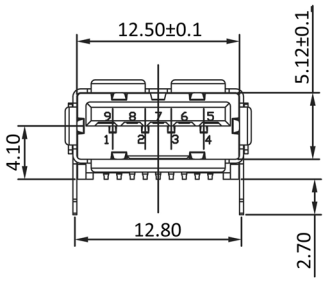

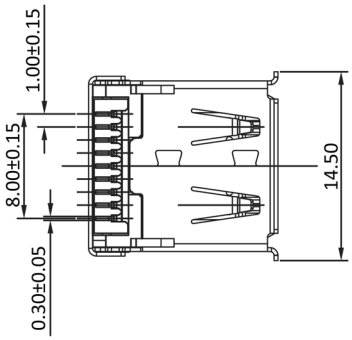

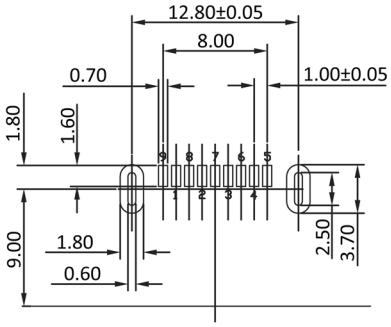

PCB Edge Recommended Layout

Order Information

Identifier:
U3BU1ASMT1
SMT Socket type A angled with retaining clips