No.	Changes and/or Note No.	Date	Intr	No	Changes and/or Note No.	Date	Intr

Revision
0

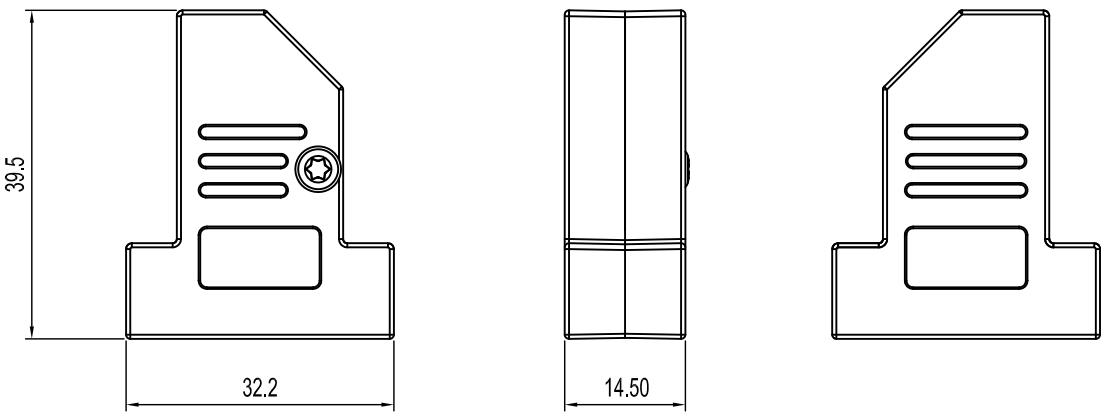

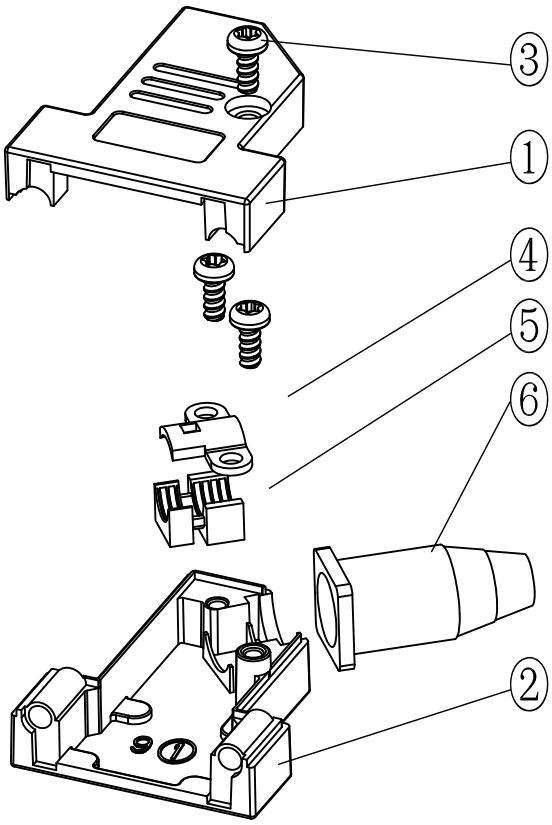

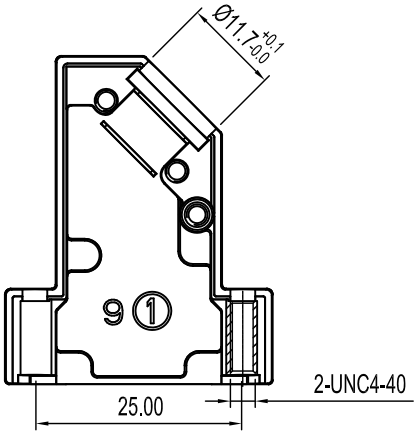

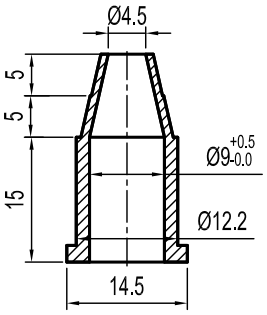

Rubber Grommet

Part Number:	Description:	Pack:
6560-0219-31	DTSL09-SLRG-S-K	Kit
6561-0219-31	DTSL09-SLRG-S	Bulk

Item	QTY	Part description
1	1	D45SL09-Upper cover
2	1	D45SL09-Lower cover
3	3	M2.5X6 Screw
4	1	Cable clamp
5	1	Plastic Insert DTSL09-Top & Side
6	1	Rubber Grommet

DATE: 2013-06-25	DRAWN: MRR	SCALE: 1:1	MATERIAL TYPE:	GENERAL TOLERANCES UNILESS OTHERWISE STATED LINEAR 0 ±0.20 0.0 ±0.15 0.00 ±0.10 ANGULAR ±0°30' ALL DIMEMSIONS IN mm THIRD ANGLE PROJECTION
AUDITING:	APPROVED:		REPLACES:	

encitech connectors AB

DTSL09-SLFR-S-Series

DRAWING No: 6688-9609-2