THIS DRAWING IS UNPUBLISHED. RELEASED FOR PUBLICATION -,- .
© COPYRIGHT - By - ALL RIGHTS RESERVED.

LOC	DIST
CM	53

REVISIONS

P	LTR	DESCRIPTION	DATE	DWN	APVD
	U3	REVISED PER ECR-17-006277	25MAY2017	BW	KR

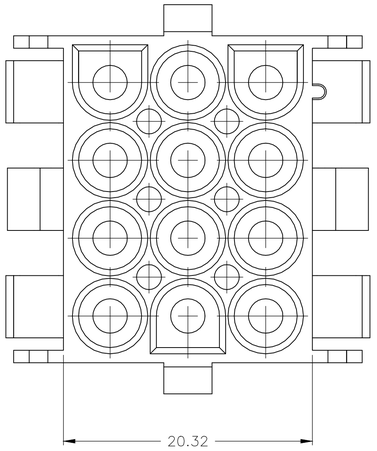

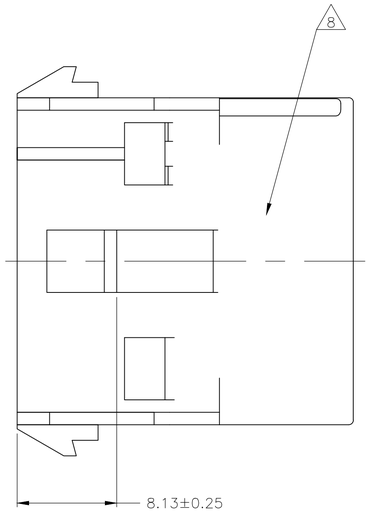

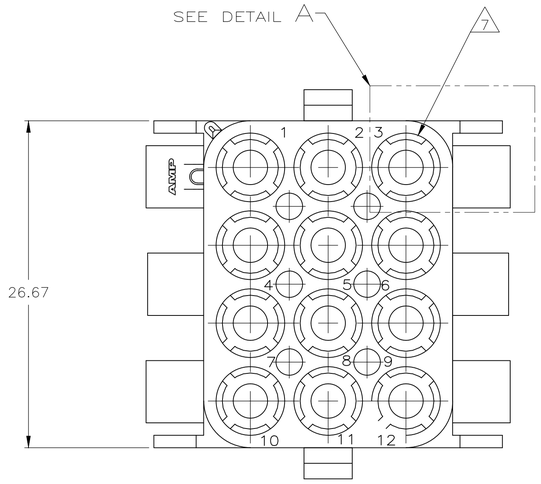

1. MATES WITH APPROPRIATE UNIVERSAL MATE-N-LOK™ PLUG.
2. RECOMMENDED PANEL THICKNESS 0.76 – 2.29.
3. PANEL MUST BE PUNCHED SO THAT THE HOUSING ENTERS THE PANEL IN THE SAME DIRECTION AS THE PUNCH.

4 OPTIONAL FOR KEYING HOUSING IN PANEL.

5 CIRCUIT NUMBER 1 LOCATION.

6 DIMENSIONS SHOWN REPRESENT PRODUCT IN DRY, AS MOLDED, CONDITION. ADDITIONAL 2% GROWTH DUE TO SUBSEQUENT MOISTURE ABSORPTION MAY OCCUR AND SHOULD BE ACCOUNTED FOR.

7 FOUR RIBS EQUALLY SPACED, NO SPECIFIC ORIENTATION. NO RIBS OR SIX RIBS EQUALLY SPACED, NO SPECIFIC ORIENTATION, OPTIONAL.

8 UNDERWRITERS RECOGNIZED COMPONENT LOGO AND CSA CERTIFICATION LOGO TO BE LOCATED ONCE EACH ON SIDE OF HOUSING.

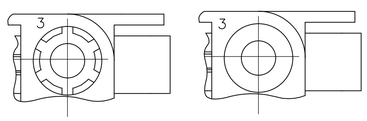

DETAIL A
OPTIONAL CONSTRUCTION

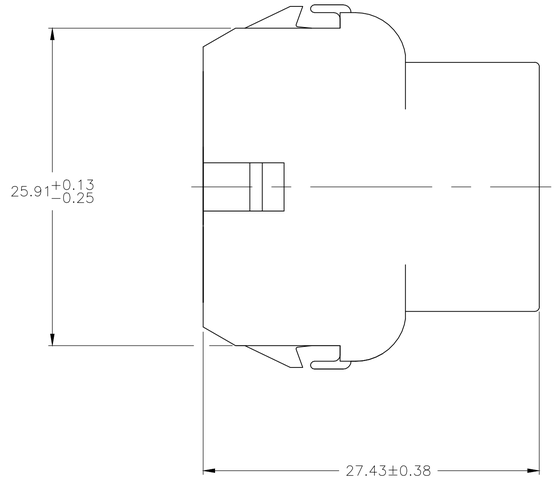

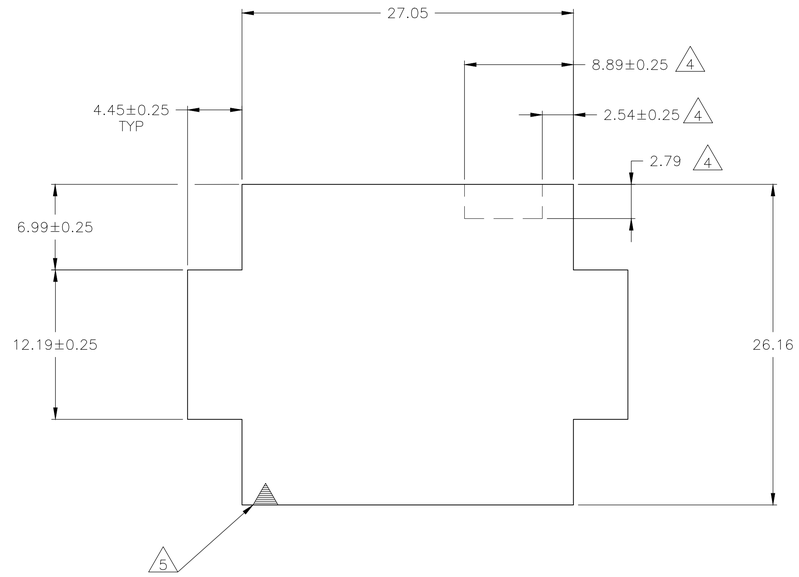

RECOMMENDED PANEL CUT OUT

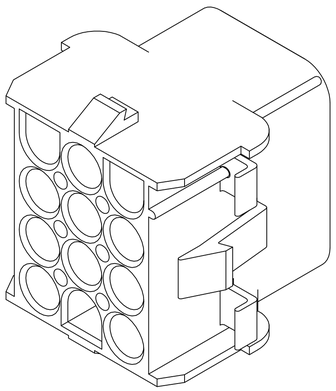

3-DIMENSIONAL MODEL
NTS

6.99	.275	27.43	1.080
4.45	.175	27.05	1.065
2.79	.110	26.67	1.050
2.54	.100	26.16	1.030
2.29	.090	25.91	1.020
0.76	.030	20.32	.800
0.38	.015	12.19	.480
0.25	.010	8.89	.350
0.13	.005	8.13	.320
MM	IN	MM	IN

CONVERSION TABLE

COLOR	PART NO.
BLACK	1-350783-9
GRAY	1-350783-8
BLUE	1-350783-6
GREEN	1-350783-5
YELLOW	1-350783-4
ORANGE	1-350783-3
RED	1-350783-2
BROWN	1-350783-1
NATURAL	350783-1

THIS DRAWING IS A CONTROLLED DOCUMENT.

DIMENSIONS: mm

TOLERANCES UNLESS OTHERWISE SPECIFIED:
0 PLC ± –
1 PLC ± –
2 PLC ± 0.13
3 PLC ± –
4 PLC ± –
ANGLES ± 1°0'

MATERIAL: NYLON,UL 94V-0
FINISH: –

DWN K. WHITAKER 28MAY92
CHK R. SWING 28MAY92
APVD D. SELF 02JUN92
PRODUCT SPEC –
APPLICATION SPEC –
WEIGHT –

TE Connectivity

NAME: CAP,12 CIRCUIT, UNIVERSAL MATE-N-LOK™

SIZE	CAGE CODE	DRAWING NO	RESTRICTED TO
A1	00779	C-350783	–

CUSTOMER DRAWING | SCALE 4:1 | SHEET 1 OF 1 | REV U3

4805 (3/11)