RoHS compliant

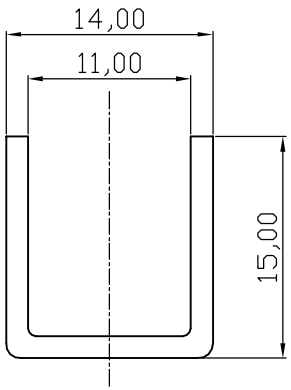

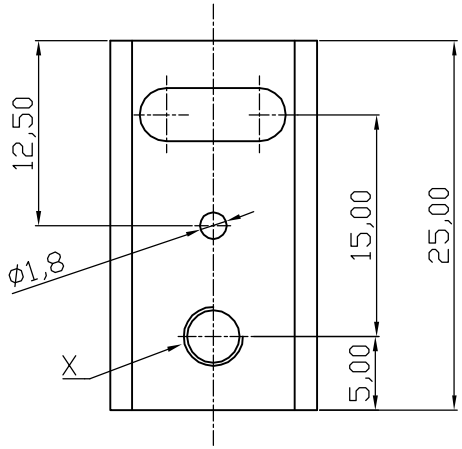

Notes
Material: AL1050 T=1.5mm

Option	Dimension x	Version	Thermal resistance
V5074C-T	Ø3,2	Black anodized	20

Scale	1:1					
TOLERANCE						
UNIT	±0.25					
		②	Modify P/N	12.10.2010	Dean	
		①	Drawn	12.10.2009	Schulz	
		Id.	Modification	Date	Name	

	Date	Name
Drawn	12.10.2009	Schulz
Approved	12.10.2010	Plate

ASSMANN WSW components

Customer-No.
Conrad P/N : 183877

ASSMANN WSW-No.
V5074C-T

Drawing-No.
ASS 0421 HS

rev02

Replace

Sheet