REV.	DESCRIPTION	DRAWN	CHECKED	APPROVED
A	NEW RELEASE	LJH 09/22/05'		LJC 09/22/05'
B	HOUSING CHANGE	JLZ 07/25/14'		LJC 07/25/14'
C	TERMINAL CHANGE	JLZ 07/25/14'		

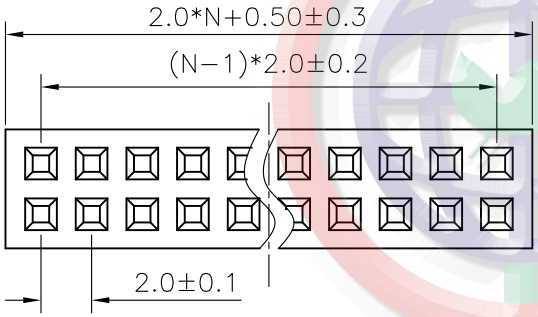

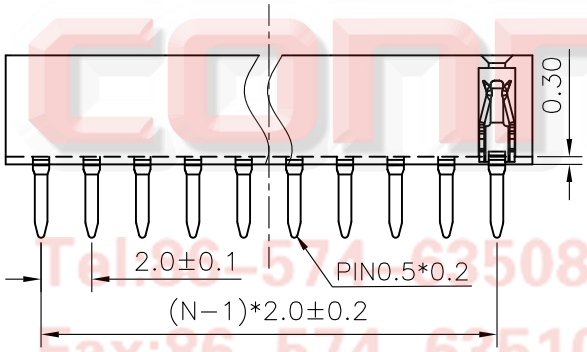

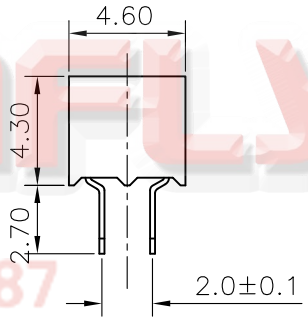

N: NUMBER OF CONTACTS/2

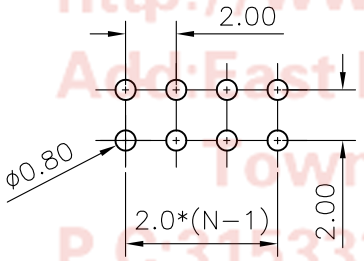

RECOMMEND PCB LAYOUT
(TOLERANCE=±0.05)

NOTES:

1. ELECTRICAL CHARACTERISTICS:
   1.1 CONTACT RESISTANCE: 20mΩ Max. INITIAL.
   1.2 DIELECTRIC WITHSTANDING VOLTAGE: 500V AC(rms) FOR 1 MINUTE.
   1.3 INSULATION RESISTANCE: 1000MΩ Min.
2. ENVIRONMENT CHARACTERISTICS:
   2.1 TEMPERATURE: −40°C~+105°C.
3. PART NUMBER: DS1026−05
4. PRODUCT NUMBER CODE:
   DS1026−05 − X X X X X

- CONTACTS TYPE
  V:VERTICAL TYPE
- HOUSING COLOR
  B:BLACK
- CONTACT PLATING
  8: FULL GOLD FLASH
- CONNECTOR TYPE
  S:SOCKET
- No.OF CONTACTS
  2*2−2*X
- SERIES No.
  DS1026−05

GENERAL TOLERANCE		ANGLE TOLERANCE	
X.	±0.60	X.	±5°
.X	±0.38	.X	±3°
.XX	±0.25	.XX	±2°

DRAWING TYPE	CUSTOMER		
SCALE	1:1	SHEET	1 OF 1
DRAWING NO.	C−DS1026−05−XXXXX−C		

PROJECTION		TITLE	FEMALE HEADER PITCH 2.0mm Vertical Trhough TYPE
UNITS	mm		
SHEET SIZE	A4	SERIES	DS1026−05 SERIES

晨翔电子有限公司
CONNFLY ELECTRONIC CO. LTD

CONNFLY®
Tel:86-574-63508787
Fax:86-574-63510817
E-mail:sale@connfly.com
http://www.connfly.com
Add:East Industry Zone KuangYan Town Cixi Ningbo China
P.C:315333