Selection diagram

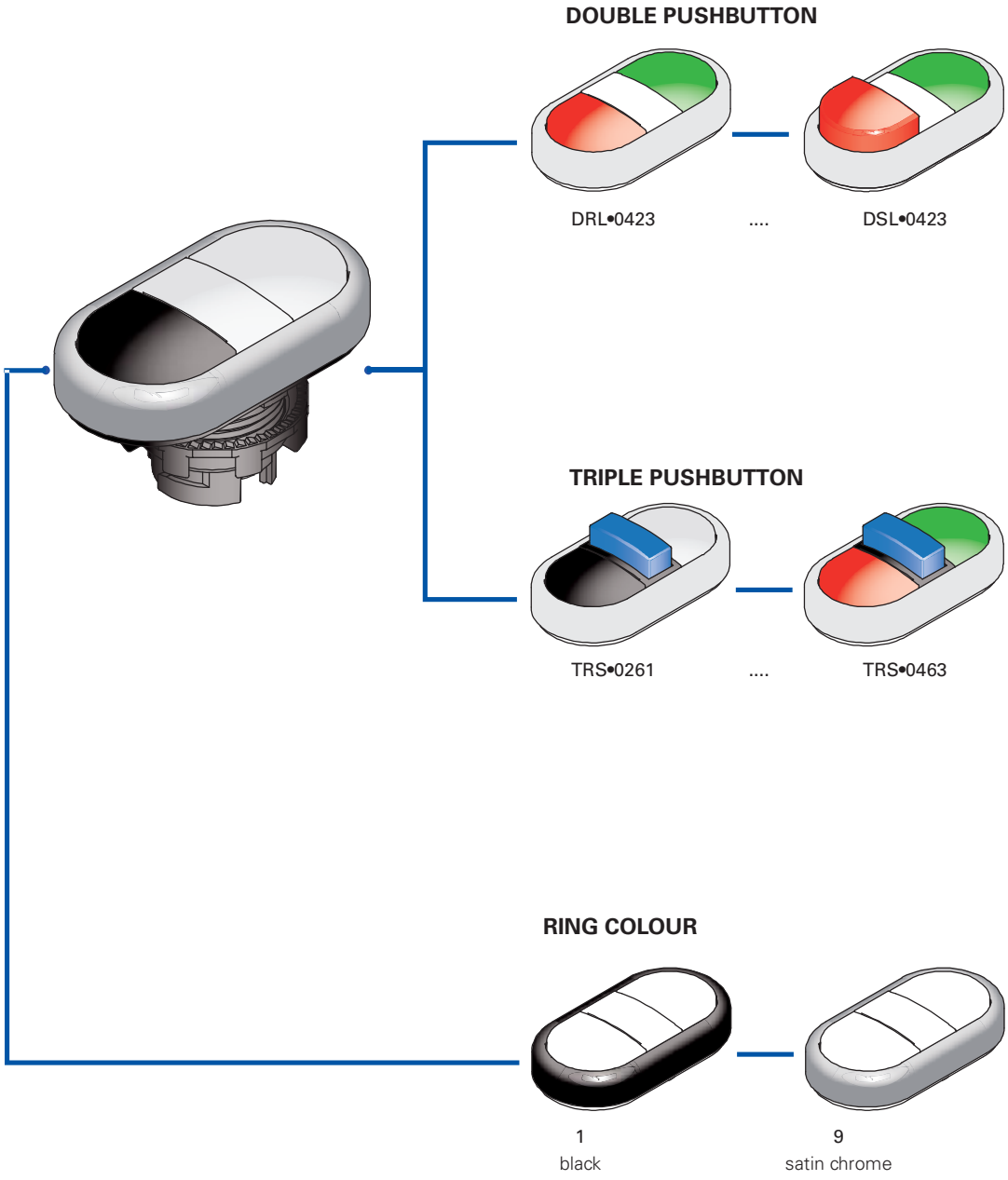

Double and triple pushbuttons code structure

article — options

E2 1PDRL10423-T6

Number of functions	
D	double pushbutton
T	triple pushbutton

Upper and lower pushbuttons	
A	upper projecting, lower flush
B	upper projecting, lower projecting
R	upper flush, lower flush
S	upper flush, lower projecting

Central element	
C	blanking plug (double pushbuttons only)
L	indicator light (double pushbuttons only)
S	projecting button (triple pushbuttons only)

Ring colour	
1	black
9	satin chrome

Ambient temperature	
	-25°C ... +85°C (standard)
T6	-40°C ... +85°C

Colour and markings

	upper pushbutton		central element		lower pushbutton	
	colour	marking	colour	marking	colour	marking
0423	green	-	white	-	red	-
0221	white	-	white	-	black	-
0463	green	-	blue	-	red	-
0261	white	-	blue	-	black	-

	upper pushbutton		central element		lower pushbutton	
	colour	marking	colour	marking	colour	marking
AAAD	green	**I**	white	-	red	**O**
AAAP	green	**START**	white	-	red	**STOP**
AAAA	white	**I**	white	-	black	**O**
AAAN	white	**START**	white	-	black	**STOP**
AAAB	black	↑	white	-	black	↓
AAAC	black	**+**	white	-	black	**-**

	upper pushbutton		central projecting button		lower pushbutton	
	colour	marking	colour	marking	colour	marking
AAAY	green	**I**	red	**STOP**	green	**II**
AAAZ	green	←	red	**STOP**	green	→
AABD	white	→	red	**STOP**	black	←
AABA	green	↑	red	**STOP**	green	↓
AABE	white	↑	red	**STOP**	black	↓
AABF	black	↑	red	**STOP**	black	↓
AABB	green	**+**	red	**STOP**	green	**-**
AABC	white	**+**	red	**STOP**	white	**-**

Attention! The feasibility of a code number does not mean the effective availability of a product. Please contact our sales office.

Main features
- 2 or 3 pushbuttons versions
- Protection degree IP67
- Illuminated version

Technical data

General

Protection degree:	IP67 according to IEC 60529
Ambient temperature:	-25°C +80°C
Mechanical endurance:	1 million operations cycles
Max operating frequency:	3600 operations cycles/hour
Actuating travel:	2,8 mm (NO contact), 1,4 mm (NC contact)
Actuating force:	5,5 N (1 NO contact) 4,6 N (1 NC contact)
Additional contact actuating force:	+ 2,6 N (1 NO contact) + 1,7 N (1 NC contact)
Maximum travel:	5 mm
Ring driving torque:	2 ... 2,5 Nm
Utilization requirements:	see page 61

In conformity with standards:
IEC 60947-1, IEC 60947-5-1, IEC 60204-1, EN 60947-1, EN 60947-5-1, EN 60204-1, UL 508, CSA 22-2 N°14

⚠ **Installation for safety applications:**
Use only switches marked with the symbol ⊖. The safety circuit must always be connected with the **NC contacts** (normally closed contacts: 1-2) as stated in the standard EN 60947-5-1, encl. K, par. 2.

Markings and quality marks:

CE

In conformity with requirements requested by:
Low Voltage Directive 2006/95/EC, Machinery Directive 2006/42/EC and Electromagnetic Compatibility 2004/108/EC.
Positive contact opening in conformity with standards:
IEC 60947-5-1, EN 60947-5-1, VDE 0660-206.

General characteristics

Shape

The new EROUND line double and triple pushbuttons are available in two shapes in order to suit any kind of application: projecting and flush. The possibility to choose shapes, colours and symbols allows various codes combinations.

Mechanical endurance

Thanks to their particular design Pizzato Elettrica double and triple pushbuttons guarantee a Mechanical endurance of more than 1.000.000 operations.

Illuminated version

A version with central indicator light is available for double pushbuttons.

Protection degree IP67

This series pushbuttons all have protection degree IP67, this way guaranteeing a total protection also in hard environmental conditions.

Temperature range extended

-40°C

Special versions can be ordered for use in environments where the temperature changes from +80°C to -40°C.
They can be installed inside cold stores, sterilizers or other equipments with very low ambient temperature. Special materials that have been used to realize these versions, maintain unchanged their features also in these conditions, widening the installation possibilities.

Double pushbuttons selection table

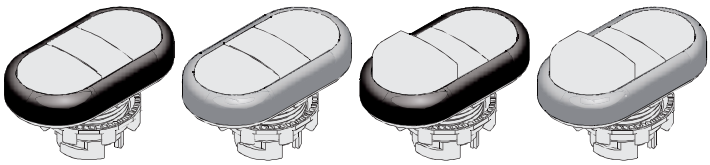

Actuator colour and marking	flush upper pushbutton flush central element flush lower pushbutton		flush upper pushbutton flush central element projecting lower pushbutton	
	black ring	satin chrome ring	black ring	satin chrome ring
green pushbutton white indicator light red pushbutton	E2 1PDRL10423	E2 1PDRL90423	E2 1PDSL10423	E2 1PDSL90423
"I" green pushbutton white indicator light "O" red pushbutton	E2 1PDRL1AAAD	E2 1PDRL9AAAD	E2 1PDSL1AAAD	E2 1PDSL9AAAD
"START" green pushbutton white indicator light "STOP" red pushbutton	E2 1PDRL1AAAP	E2 1PDRL9AAAP	E2 1PDSL1AAAP	E2 1PDSL9AAAP
white pushbutton white indicator light black pushbutton	E2 1PDRL10221	E2 1PDRL90221	E2 1PDSL10221	E2 1PDSL90221
"I" white pushbutton white indicator light "O" black pushbutton	E2 1PDRL1AAAA	E2 1PDRL9AAAA	E2 1PDSL1AAAA	E2 1PDSL9AAAA
"START" white pushbutton white indicator light "STOP" black pushbutton	E2 1PDRL1AAAN	E2 1PDRL9AAAN	E2 1PDSL1AAAN	E2 1PDSL9AAAN
"↑" black pushbutton white indicator light "↓" black pushbutton	E2 1PDRL1AAAB	E2 1PDRL9AAAB	E2 1PDSL1AAAB	E2 1PDSL9AAAB

Triple pushbuttons selection table

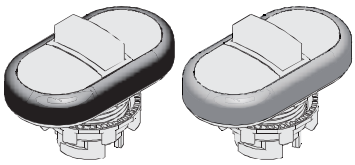

Actuator colour and marking	flush upper pushbutton projecting central pushbutton flush lower pushbutton	
	black ring	satin chrome ring
"I" green pushbutton "STOP" red pushbutton "II" green pushbutton	E2 1PTRS1AAAY	E2 1PTRS9AAAY
"←" green pushbutton "STOP" red pushbutton "→" green pushbutton	E2 1PTRS1AAAZ	E2 1PTRS9AAAZ
"→" white pushbutton "STOP" red pushbutton "←" black pushbutton	E2 1PTRS1AABD	E2 1PTRS9AABD
"↑" green pushbutton "STOP" red pushbutton "↓" green pushbutton	E2 1PTRS1AABA	E2 1PTRS9AABA

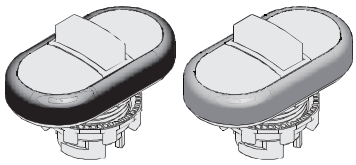

Actuator colour and marking	flush upper pushbutton projecting central pushbutton flush lower pushbutton	
	black ring	satin chrome ring
"↑" white pushbutton "STOP" red pushbutton "↓" black pushbutton	E2 1PTRS1AABE	E2 1PTRS9AABE
"↑" black pushbutton "STOP" red pushbutton "↓" black pushbutton	E2 1PTRS1AABF	E2 1PTRS9AABF
"+" green pushbutton "STOP" red pushbutton "-" green pushbutton	E2 1PTRS1AABB	E2 1PTRS9AABB
"+" white pushbutton "STOP" red pushbutton "-" white pushbutton	E2 1PTRS1AABC	E2 1PTRS9AABC

Items with code on the **green** background are available in stock

Double pushbuttons complete units

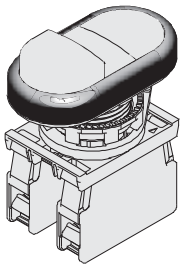

Actuator colour and marking		Contacts			flush upper button flush central element projecting lower button
		pos 2	pos 3	pos 1	black ring
	"I" green pushbutton black blanking plug "O" red pushbutton	1NC	-	1NO	E2 AC-DXBC0601 E2 1PDSC1AAAK + E2 1BAC11 + E2 CP01G2V1 E2 CP10G2V1

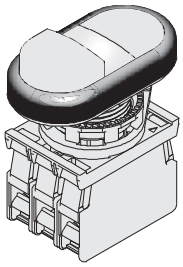

Actuator colour and marking		Contacts			flush upper button flush central element projecting lower button
		pos 2	pos 3	pos 1	black ring
	"I" green pushbutton white indicator light "O" red pushbutton	1NC	LED	1NO	E2 AC-DXBC0602 E2 1PDSL1AAAD + E2 1BAC11 + E2 CP01G2V1 + E2 LP1A2V1 + E2 CP10G2V1

➔ For the contact block and LED block characteristics see the respective chapters.

Triple pushbuttons complete units

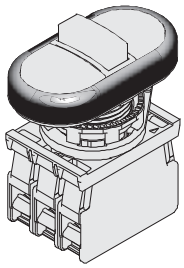

Actuator colour and marking		Contacts			flush upper button projecting central pushbutton flush lower pushbutton
		pos 2	pos 3	pos 1	black ring
	"I" green pushbutton "STOP" red pushbutton "II" green pushbut-ton	1NO	1NC	1NO	E2 AC-DXBC0801 E2 1PTRS1AAAY + E2 1BAC11 + E2 CP10G2V1 + E2 CP01G2V1 + E2 CP10G2V1

Dimensions

Flush double pushbutton

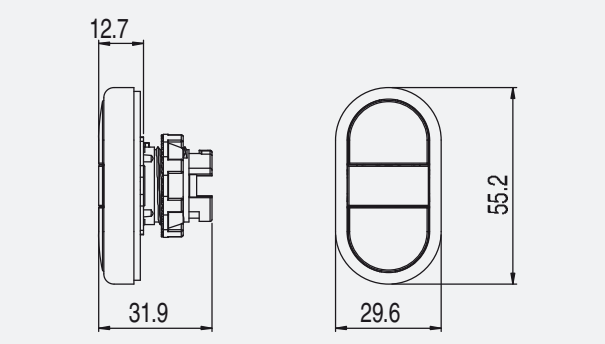

Projecting double pushbutton

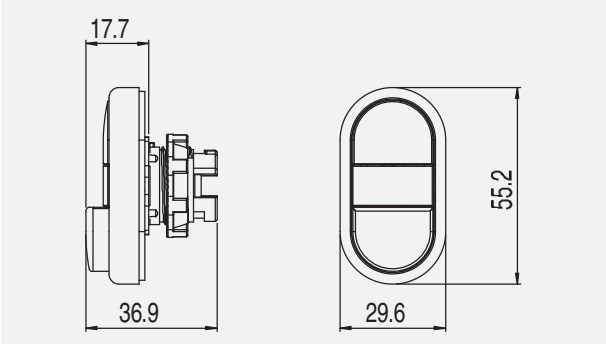

Triple pushbutton

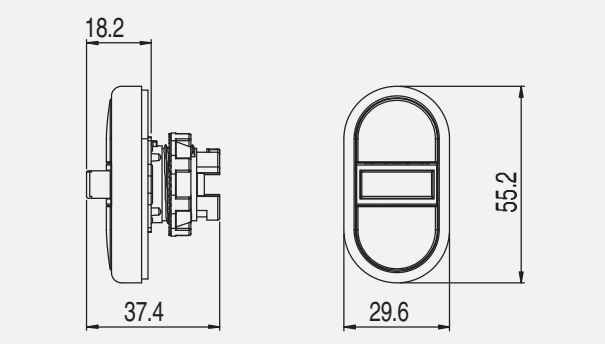

All measures in the drawings are in mm

➔ I2D and 3D files available on www.pizzato.com

Contacts maximum number

Double pushbuttons E2 1PD series

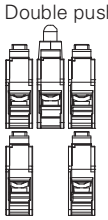

Triple pushbuttons E2 1PT series

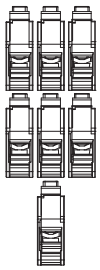

contact block

LED block

Assembling minimum distances

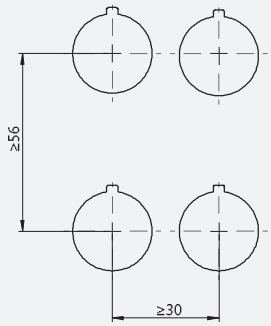

All measures in the drawings are in mm

Accessories

➔ ACCESSORIES at page 57
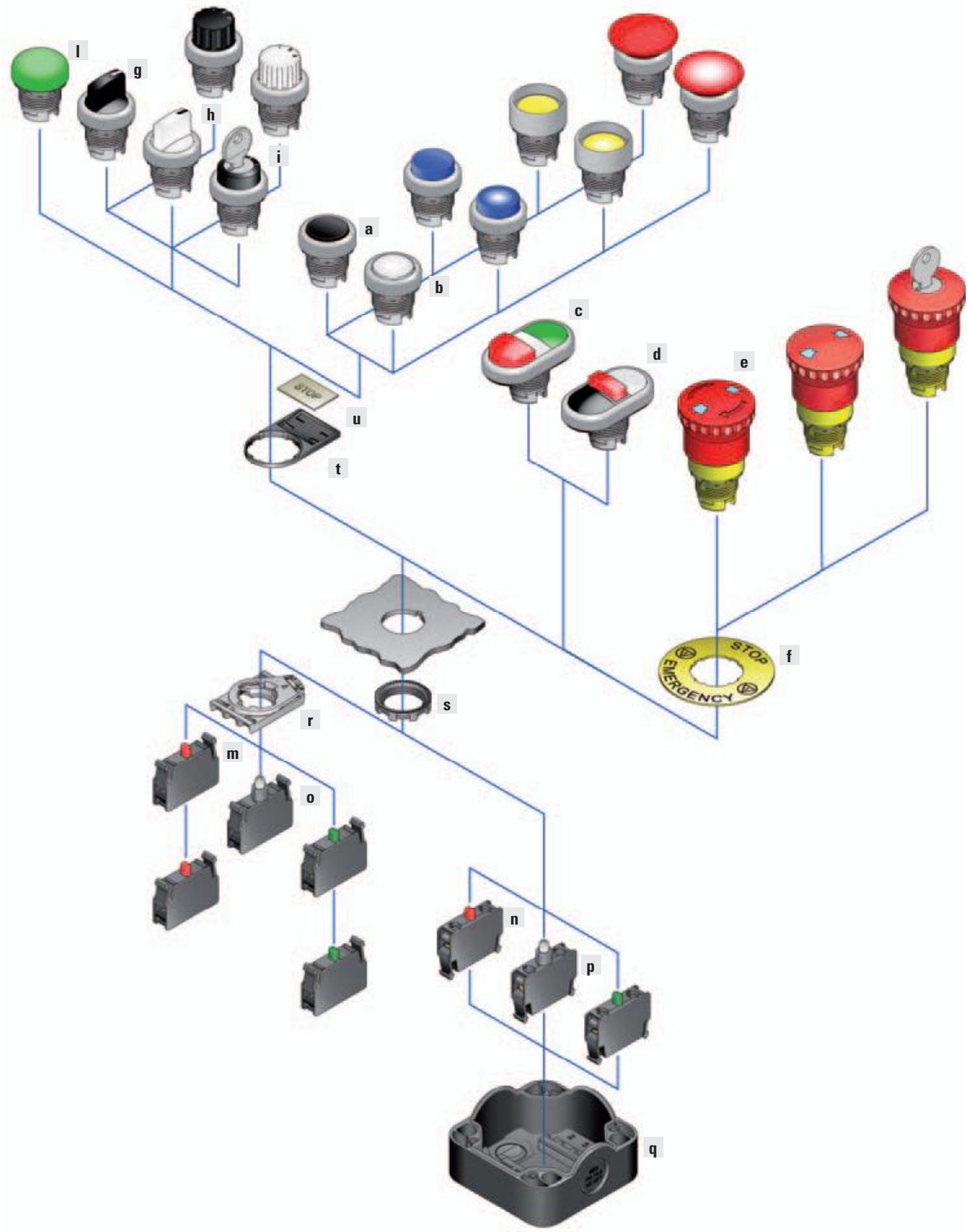
Index