Data Sheet

BNC connector Plug, straight 50 Ω

Cable category: RG 58 C/U

Connection: Crimp

Impedance: 50 Ω

Material (details): Brass, nickel plated

Connector type: Plug, straight
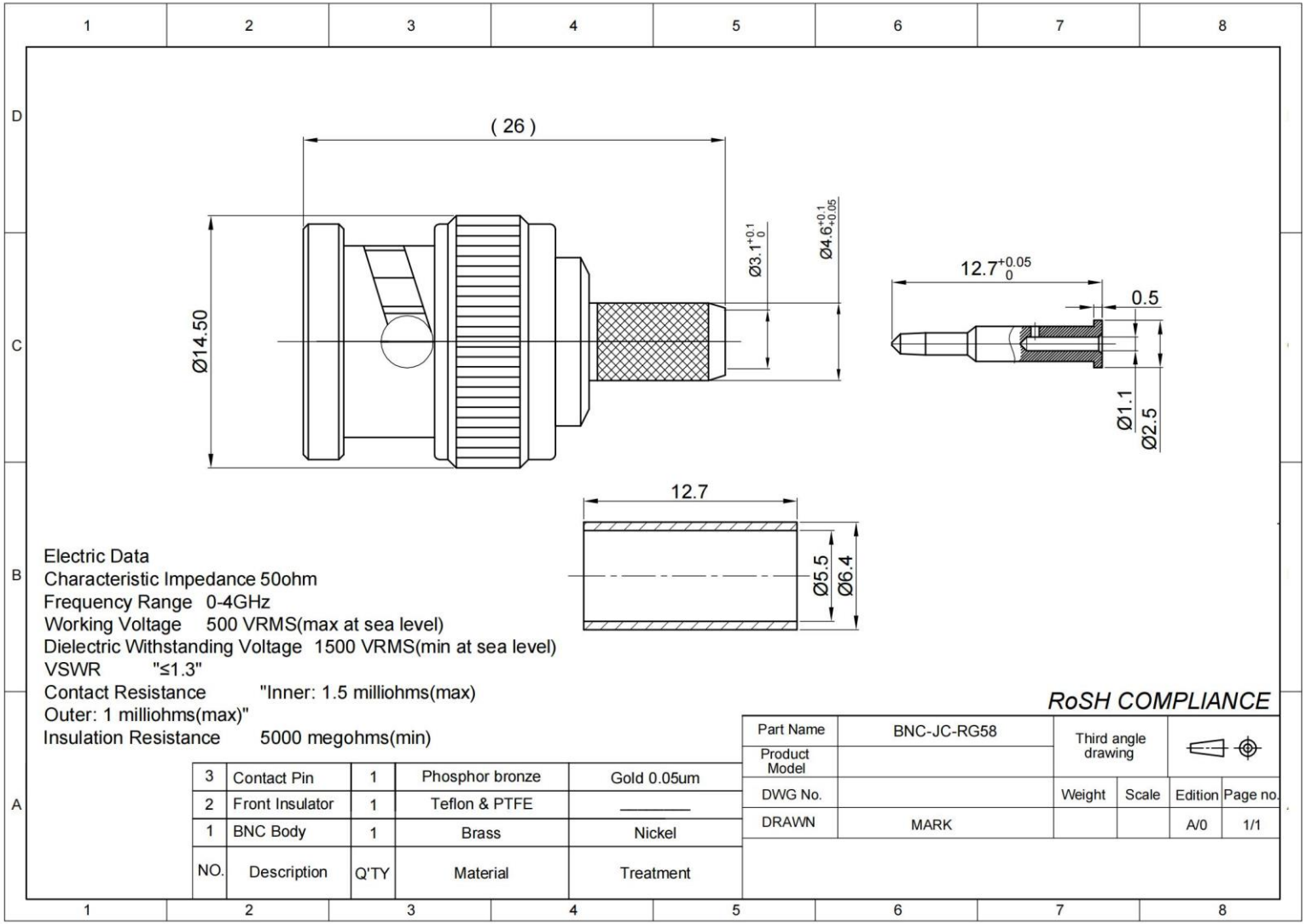
Product type: BNC Connector