CUSTOMER	TDI GROUP	FILE NO.	PS-9010R-30R	2

1

THIS DRAWING AND SPECIFICATIONS,HEREIN ARE THE CONFIDENTIAL PROPERTY OF SAMAR AND SHALL NOT BE REPRODUCED OR COPIED OR DISCLOSED IN WHOLE OR IN PART WITHOUT WRITTEN PERMISSION.

REV.	DESCRIPTION	DRAWN / DATE	APPROVED / DATE
1	ADD ASSEMBLY	YANG 01/06/2004	YANG 01/06/2004
2	ADD DIM. & CHANGE P/N	YANG 02/10/2009	

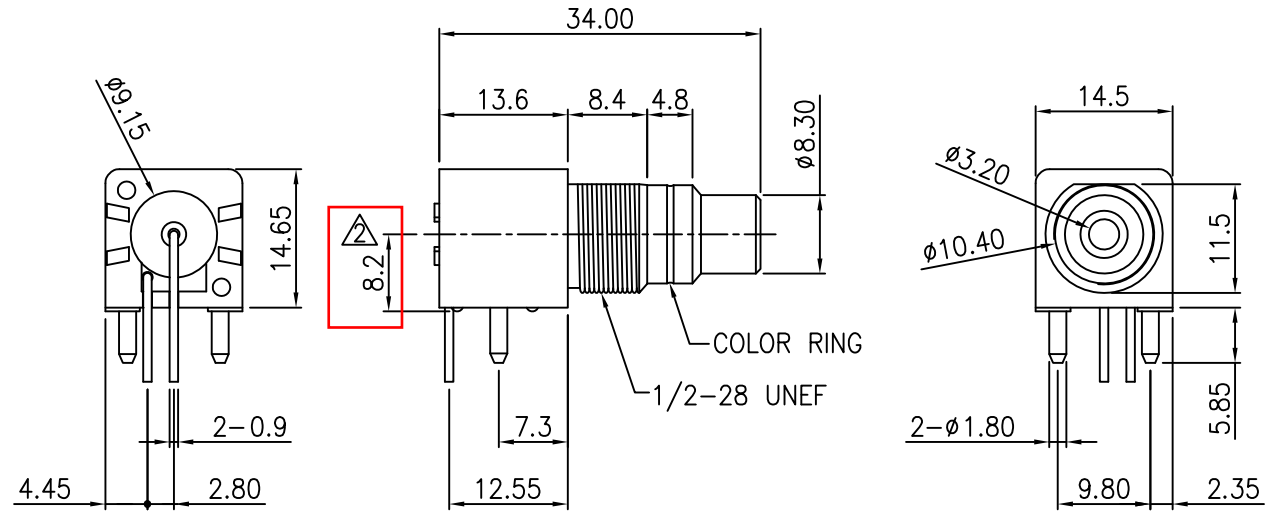

BODY

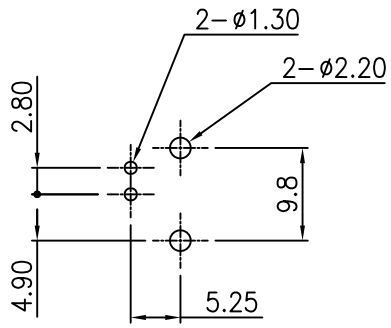

P.C.B. CONFIGURATION

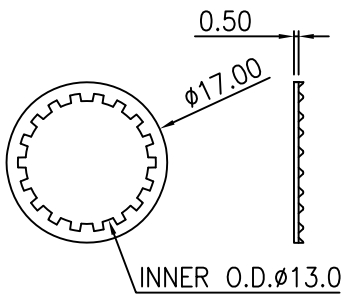

WASHER

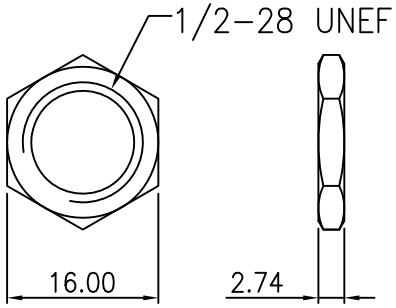

HEX NUT

2 PCS 1

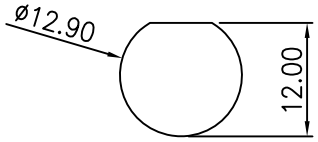

MOUNTING HOLE

1

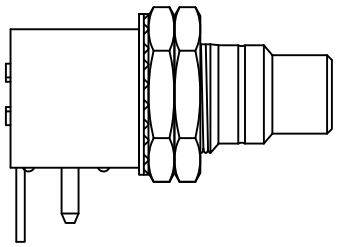

ASSEMBLY

2

P/N	COLOR RING
PS-9010R	W/BLACK COLOR RING
PS-9030R	W/RED COLOR RING

DIMENSIONS ARE IN mm [INCH]	TOLERANCES ARE FRACTIONS DECIMALS ANGLES	MATERIAL	SAMAR	GOLD-PLATED R/A RCA JACK	P/N 2 PS-9010R/30R	DRAWN YANG	DATE 05/20/2003
MOLD NO. 2	.x ±0.2 [0.008]	FINISH			PROJECT NO.		
PS-9010R-30R	.xx ±0.12 [0.005]	COLOR			SCALE 1.25:1 SIZE A4 SHEET 1 OF 1		MS062