Item no.: 3028538

Data Sheet
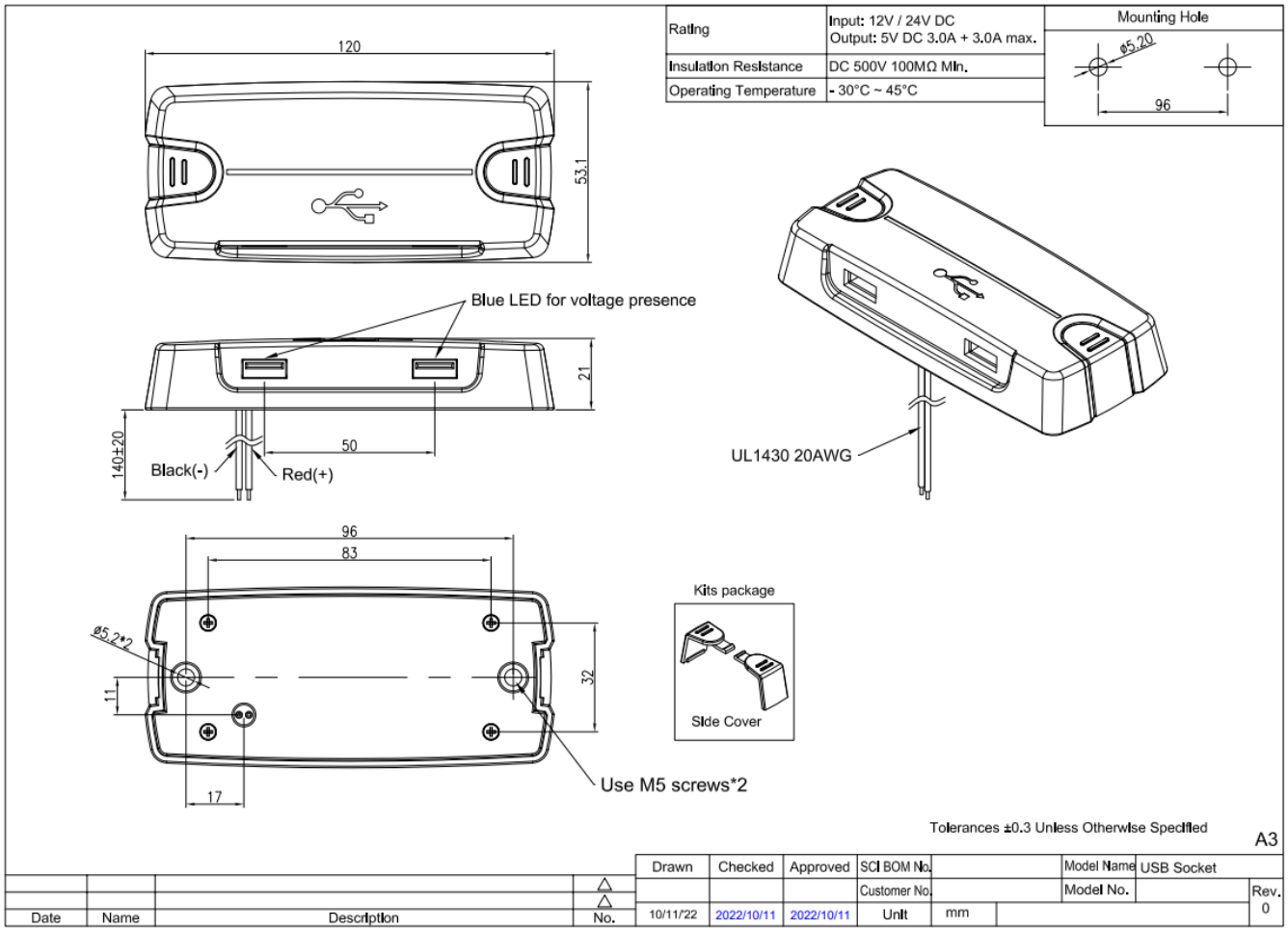
USB A x 2, surface mount, open end wire, rectangular