WINSLOW ADAPTICs

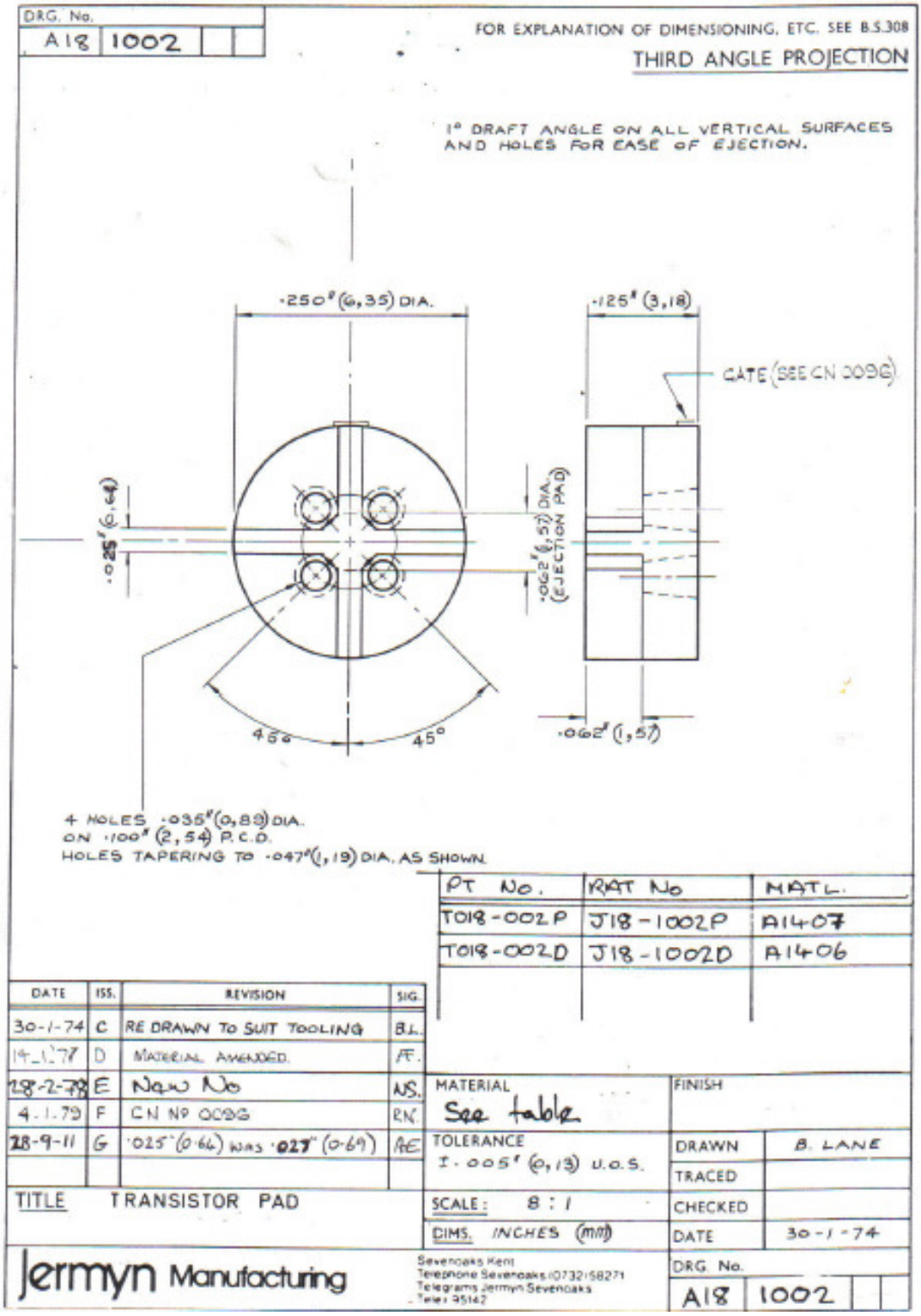

Solutions to Component Leadtime and Obsolescence

sales@winslowadaptics.com www.winslowadaptics.com