2mm 12V Tower LED Yellow 68MCD Diffused

Order code: **56-3056**

MPN: OSY5JA7K94B -12V

Features:

- High luminosity LEDs
- 2.0mm tower standard directivity
- Superior weather-resistance
- UV resistant epoxy
- Integral current limiting resistor
- TTL compatible (requires no external current limiter with 12 volt supply)
- Cost effective (saves space and resistor cost)
- Colour diffused type

Applications

- Electronic signs and signals
- Small area illuminations
- Back lighting
- Other lighting

Outline dimensions:

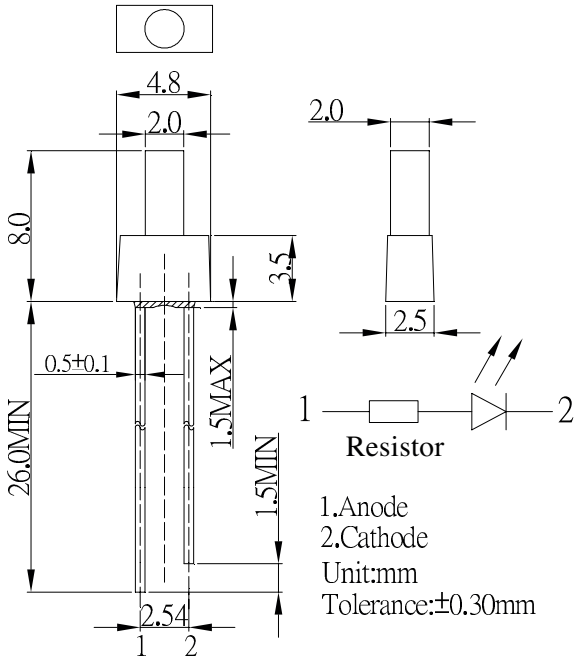

Absolute maximum rating (Ta=25°C)

Item	Symbol	Value	Unit
DC forward voltage	V_F	12	V
Reverse voltage	V_R	5	V
Power dissipation	P_D	120	mW
Operating temperature	Topr	–30 to +85	°C
Storage temperature	Tstg	–40 to +100	°C
Lead soldering temperature	Tsol	260°C/5sec	–
*Pulse width max. 10ms. Duty ratio max. 1/10			

Directivity:

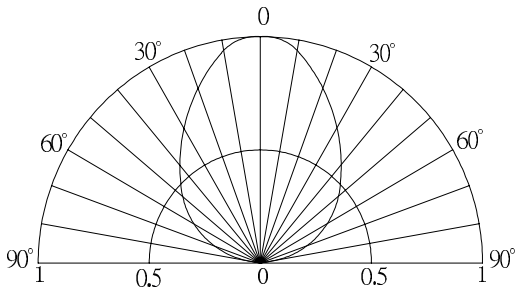

Electrical – Optical characteristics (Ta=25°C)

Item	Symbol	Condition	Min.	Typ.	Max.	Unit
DC forward currnet	I_F	I_F = 12V	–	10	–	mA
DC reverse current	I_R	V_R = 5V	–	–	10	µA
Dominant wavelength*	λ_D	I_F = 12V	585	590	595	nm
Luminous intensity*	I_V	I_F = 12V	40	68	–	mcd
50% Power angle	$2\theta_{1/2}$	I_F = 12V	–	90	–	deg

*1 Tolerance of dominant wavelength is ±1nm
*2 Tolerance of luminous intensity is ±15%
*3 Tolerance of measurements of forward voltage is ±0.1V