IDEC

S3 CONNECT

ø22 SMART RFID READER
KW2D SERIES

Smart RFID Reader

Manage user authority for machines and equipment
Control and track access to production sites

IDEC CORPORATION

ø22 **KW2D** SERIES

Compact & smart design ideal for factory automation environments

Mounts on ø22mm panel cut-out

- Front unit:
  ☐ 43.6 × 43.6mm
  Panel front height: 9.0mm
- Back unit:
  ☐ 40.0 × 40.0mm
  Depth: 48.5mm

* Actual size

Can be used for IC cards, such as employee IDs (*1).
*1 Mifare, FeliCa, etc.

IP65/67-rated to protect from washdowns and oil spills.

Designed to work on metal surfaces often used at factory automation sites.

Equipped with an LED easily visible from the side and an auxiliary buzzer, the RFID reader enables visible and audible feedback on operation status.

* Can be controlled from a host device (such as a touch panel or PLC).

Front

Standby

Verification - Success

Verification - Error

Side

PANEL MOUNT RFID READER

Holder feature available for mounting RFID tags

* 5 types are available (sold separately).

An Ethernet port enhances connection compatibility with host devices

Supported protocol

Modbus TCP

EtherNet/IP

CC-Link IE Field Basic

With a verification function inside, the verified result can be communicated to the host device as data.

* If the verification function is not used, a communication error will occur if the result is not sent back to the RFID main unit.

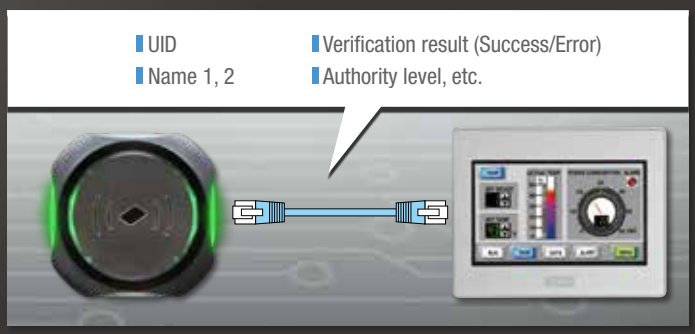

APPLICATION EXAMPLES

Restricting the use of machines and devices

BEFORE

Anyone can operate the machines.

AFTER

Inadvertent operation and setting changes are prevented, reducing equipment malfunctions and failures.

Mount the RFID reader on the operation panel of a machine and register the workers in the RFID reader. ID cards can then be used to authenticate each worker.

Managing access to control rooms and inside safety fences

BEFORE

Do not know if workers are left inside.

AFTER

By recording entry/exit logs, workers can be prevented from being trapped or left behind in a work area.

Worker's names are linked to ID cards such as employee ID cards, and that data is sent when a card is read. Logs are recorded on the host device to track entry/exit.

Manage inspection history at production lines

BEFORE

Work sheets were written by hand.

AFTER

The operator can record their work history by holding the employee ID card over the reader.

The time and work details can be recorded by using the RFID reader together with a touch panel or PLC to ensure digital traceability.

By connecting with devices such as touch panels and PLCs, the RFID reader can be used for wide variety of applications.

OPERATING ENVIRONMENT

Item	Details
OS	Windows10
CPU	1.0GHz or more
Memory	1GB or more
Environment	Microsoft.NET Framework4.0 or later

* The configuration tool can be downloaded from the IDEC website.

SCREEN 1

RFID Reader Configuration Screen

Intuitive operation allows settings to be configured on a single screen.

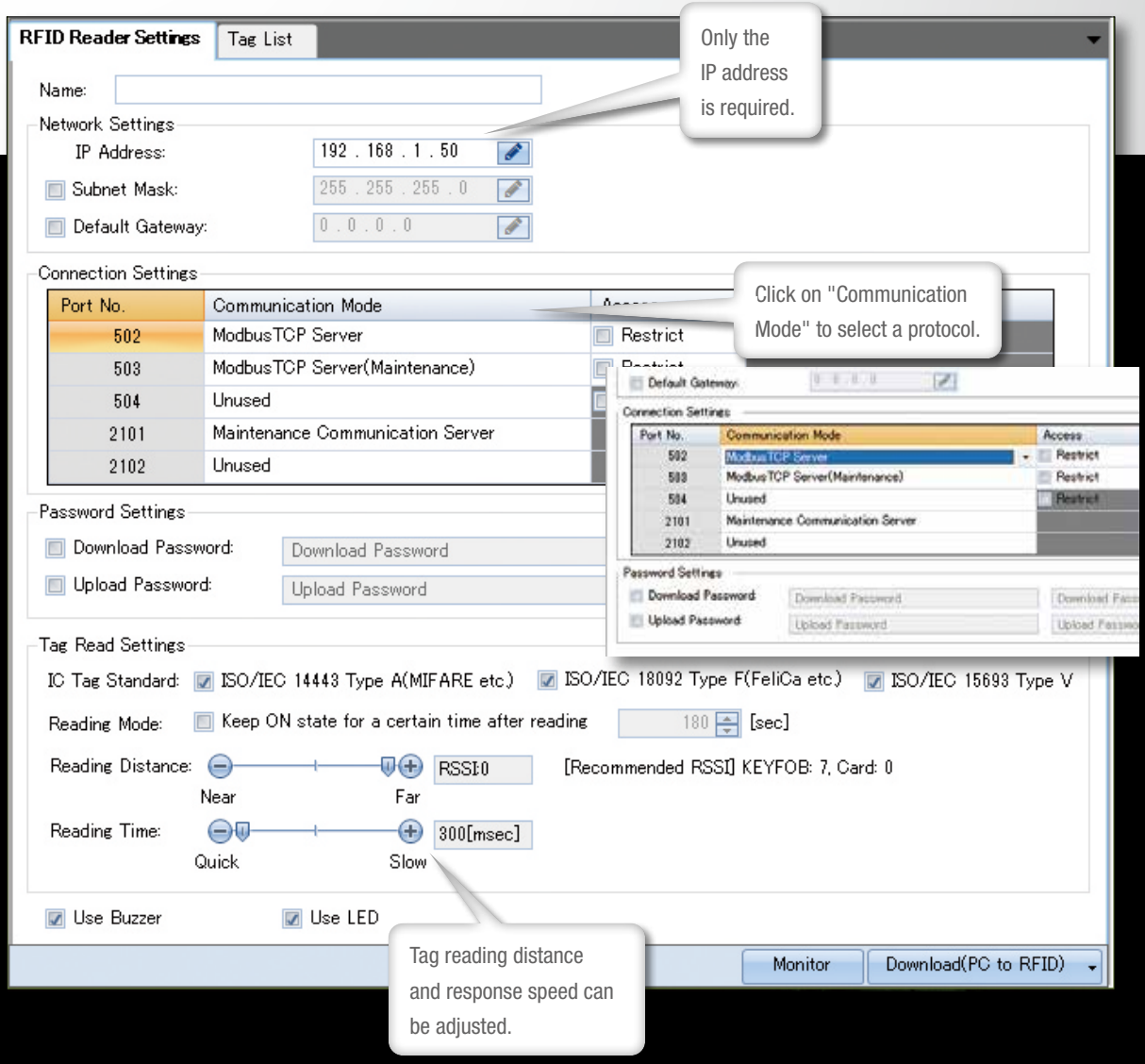

CONNECTION DIAGRAM

* Connect to a computer when configuring settings.

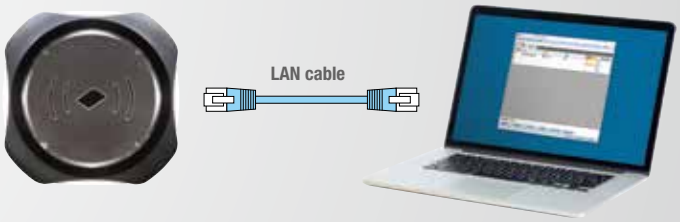

SCREEN 2

Tag List Registration Screen

Max. number of registrations **500** ITEMS

• Import and export as CSV file

The RFID reader is equipped with a verification function, enabling output of arbitrary data.

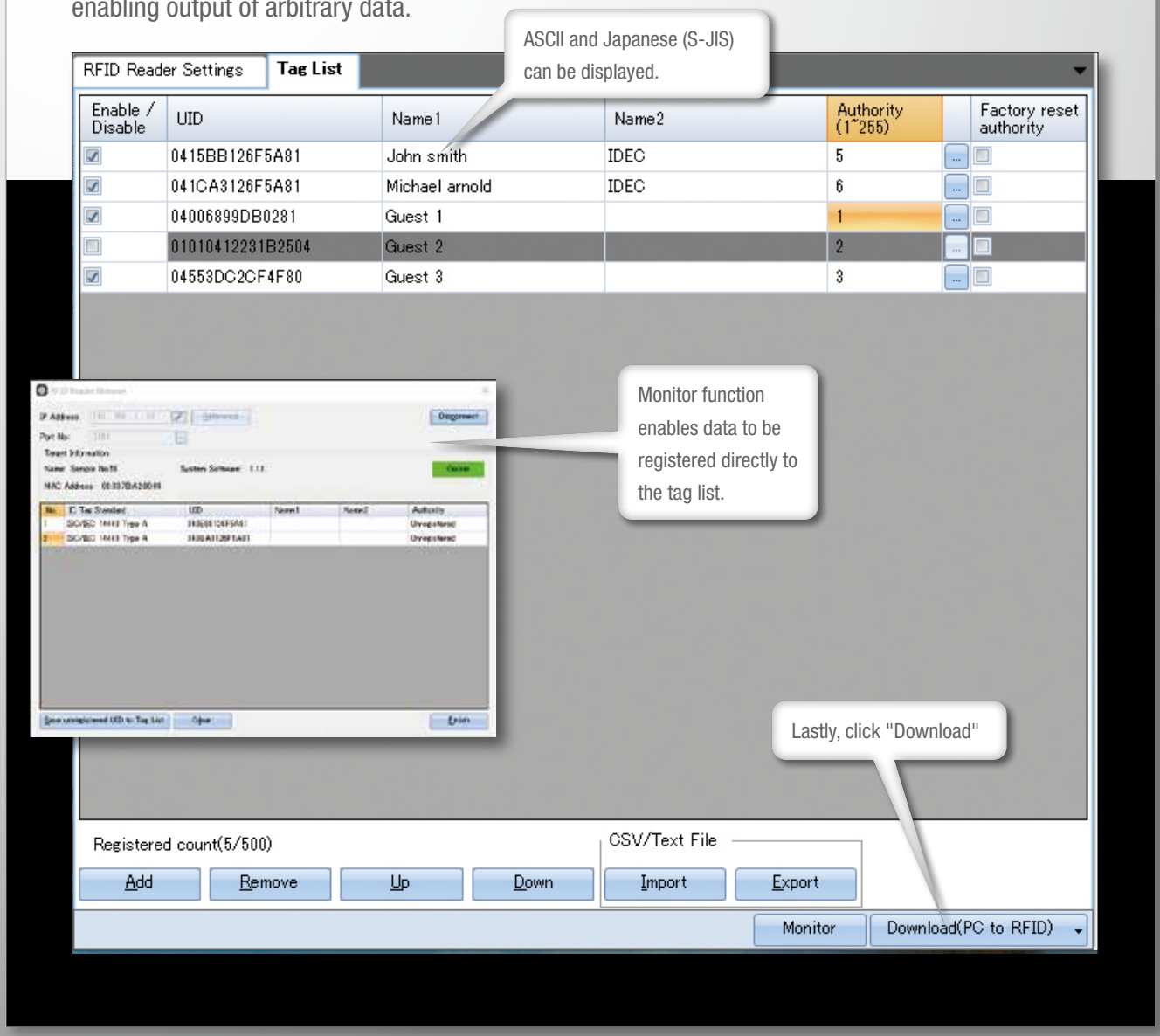

SYSTEM CONFIGURATION EXAMPLE

When using a supported communication protocol

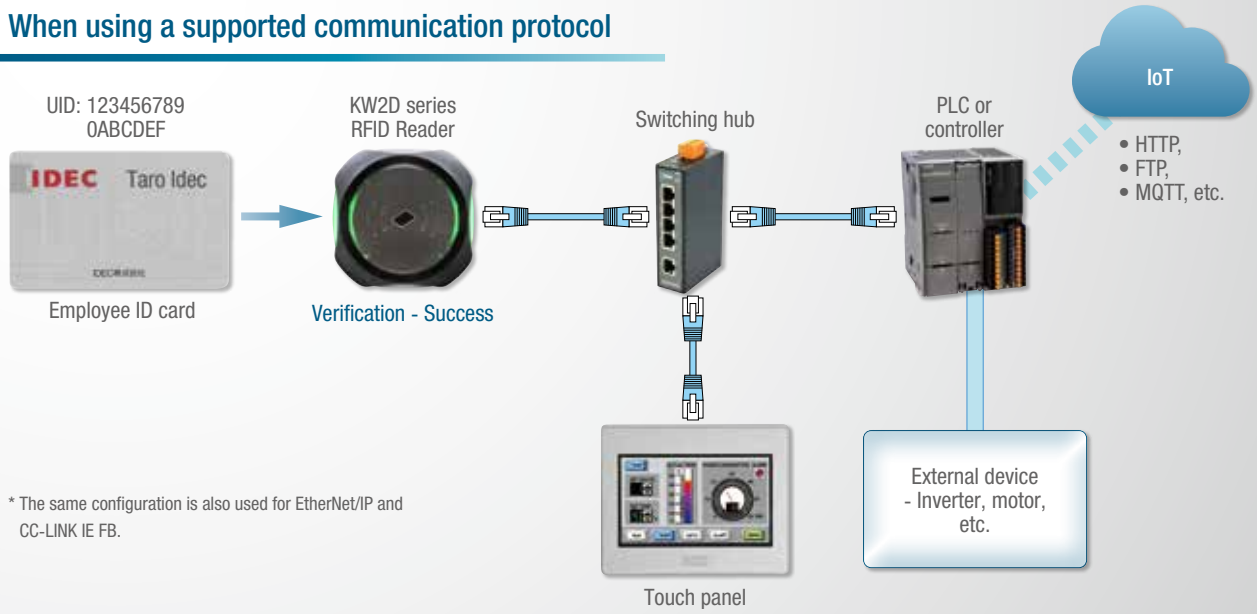

* The same configuration is also used for EtherNet/IP and CC-LINK IE FB.

Communication via Ethernet with host devices such as touch panels and PLCs

The following data can be acquired via ModbusTCP communication

• UID	Input register (300004 to 300008)
• Name 1	Input register (300012 to 300020)
• Name 2	Input register (300022 to 300030)
• Authority level	Input register (300002)
• Verification success	Input relay (100001)
• Verification error	Input relay (100002)

Next, simply enter the required data via the touch panel or PLC.

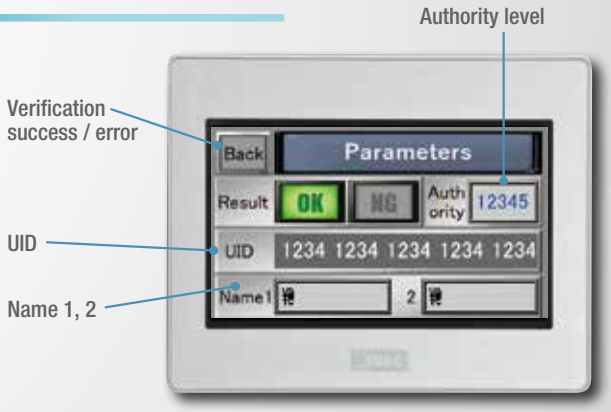

Supported character codes

UTF-8, ASCII, Japanese (Shift-JIS), Chinese (GB2312), Western Europe (ISO 8859-1)

KW2D Series ø22 Smart RFID Reader

Compact RFID reader with integrated functions for the factory automation industry

Without holder

With holder

Note: Approvals apply only to the main unit.
• For more information about certified products, see the IDEC website.

Main Unit

Quantity: 1

Model	Appearance	Power Supply	Communication Interface	Approval	Part No.
Without holder		24V DC	LAN	IEC/EN61131-2 2007 (Zone B) EN301-489-3 UL61010-1/CAN/CSA C22.2 No. 61010-1-12 UL 61010-2-201 EN50364	KW2D-R100Q4E
With holder					KW2D-RH100Q4E

RFID Tags

Tag Type	Shape	Color	Part No.	Quantity
KEYFOB		Green	KW9Z-T1X1G	1
		Yellow	KW9Z-T1X2Y	1
		Red	KW9Z-T1X3R	1
		Blue	KW9Z-T1X4S	1
		Black	KW9Z-T1X5B	1
Card		N/A	KW9Z-T2X0	2

Maintenance Parts

Name/Appearance	Specification/Dimension	Part No.	Quantity	Remarks
Cover (withot holder)	For KW2D-R	KW9Z-CV	1	
Cover (with holder)	For KW2D-RH	KW9Z-CVH	1	
Gasket	Rubber (black) Nitrile rubber	HW9Z-WM	10	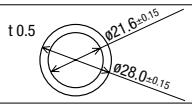
Locking Ring	Polyamide resin (black)	CW9Z-LN	10	
Locking Ring Wrench	Metal (brass) Weigh: Approx. 150g	MW9Z-T1	1	• Used to tighten the locking ring when mounting onto a panel. 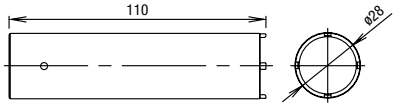

General Specifications

Electrical Specifications	Rated Input Voltage		24V DC
	Power Fluctuation Range		20.4 to 28.8V DC
	Power Consumption		2.4W maximum
	Rated Insulation Voltage		50V DC
	Allowable Momentary Power Interruption		1ms (at rated power supply voltage)
	Withstand Voltage		500V AC, 1 minute
	Insulation Resistance		100MΩ or higher (500V DC insulation resistance tester)
	Inrush Current		25A maximum
Environmental Specifications	Operating Temperature		-25 to +55°C (no freezing)
	Storage Temperature		-40 to +80°C (no freezing)
	Operating Humidity		10 to 95% RH (no condensation)
	Storage Humidity		10 to 95% RH (no condensation)
	Degree of Protection (*1)	Front Unit (*2)	IP65/67 (IEC60529)
		Back Unit	IP20 (IEC60529)
	Impact Test (*1)	Front Unit (*2)	5J (Equal to IK08)
	Corrosion Resistance		No corrosive gas
	Operating Environment		Indoors
Mechanical Specifications	Vibration Resistance		5 to 55Hz, amplitude 0.5mm, on 3 mutually perpendicular axes
	Shock Resistance		100m/s², 11ms, six directions on 3 mutually perpendicular axes
	Power Supply Terminal	Wire Pull Force	AWG24: 10N maximum AWG22: 15N maximum AWG20: 20N maximum AWG18: 30N maximum AWG16: 40N maximum
		Insertion/Removal Durability	25 times minimum
		Recommended Operation Force of Pusher	20N (40N maximum)
	Tag Holder	Insertion/Removal Durability	10,000 times minimum
	Indicators		LED colors (red: 2, green: 2 white: 4)
	Buzzer		Single tone
	PCB		FR, 94V-0
	Case Materials	Front Cover Back Cover	PBT
		Front Base Back Base	PA66
		Lens	PCT
	Weight (Approx.)		70g

*1 IP performance and IK ratings are not subject to UL certification.
*2 Front of the panel only.

Ethernet Communication Specifications

Communication		Ethernet
Electrical Characteristics		IEEE802.3 compliant
Connector	Connector	RJ45
	Pull Force	15N
	Insertion/ Removal Durability	100 times minimum
Transmission Speed		10BASE-T, 100BASE-TX
Communication Functions		Modbus TCP Server
		EtherNet/IP
		CC-Link IE Field Basic
Cable		CAT.5 STP, with a maximum length of 100m

RFID Interface Specifications

Supported Tag Standards		ISO/IEC14443 Type A (Type A), ISO/IEC18092 (Type F), JIS X6319-4 (Type F), ISO/IEC 15693 (Type V)
Communication Speed	Type F (Felica)	212kbps
	Type A (Mifare)	106kbps
	Type V (I-CODE)	26.5kbps
Carrier Frequency		13.56MHz (HF band)
Wireless Standards	Supported Area	Japan, United States, Canada, EU, China, Taiwan, India, Thailand, Mexico *Only KW2D-R100Q4E is supported in Mexico.
Tag Reading Distance (*1)	Card Type	0 to 15mm
	KEYFOB Type	0 to 5mm
Read Reaction Time		300 to 3000 [msec] (adjustable with [Reading Time] in the KW RFID Configurator)

*1 The tag reading distance is a value that was measured using the tags listed in "Names of LSIs in Tested Tags" (on page 2-4 of the User's Manual) that IDEC has tested.
In addition, the reading distance is measured while the is tag stationary and centered on the front unit.
The tag reading distance will vary depending on the actual tags used, their location, and the operating environment.

Mounting Hole Layout

Drill a mounting hole in the panel with the dimensions shown in the following diagram.

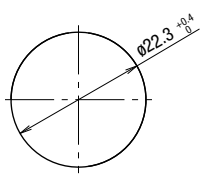

* See the manual for examples of mounting pitch.
* See the manual for minimum mounting pitch.

RFID Tag Specifications

Applicable Standard	Card	ISO/IEC14443 Type A
	KEYFOB	
Operating Temperature	Card	0°C to 50°C
	KEYFOB	-25°C to 55°C
Storage Temperature	Card	-20°C to 50°C
	KEYFOB	-25°C to 75°C
Operating Humidity	Card	20% RH to 90% RH or less
	KEYFOB	60% RH or less
Storage Humidity	Card	90% RH or less
	KEYFOB	60% RH or less
Reading Distance	Card	0 to 10mm
	KEYFOB	0 to 5mm
Operating Environment		Indoors

Dimensions

(Units: mm)

Main Unit

Without holder: KW2D-R100Q4E

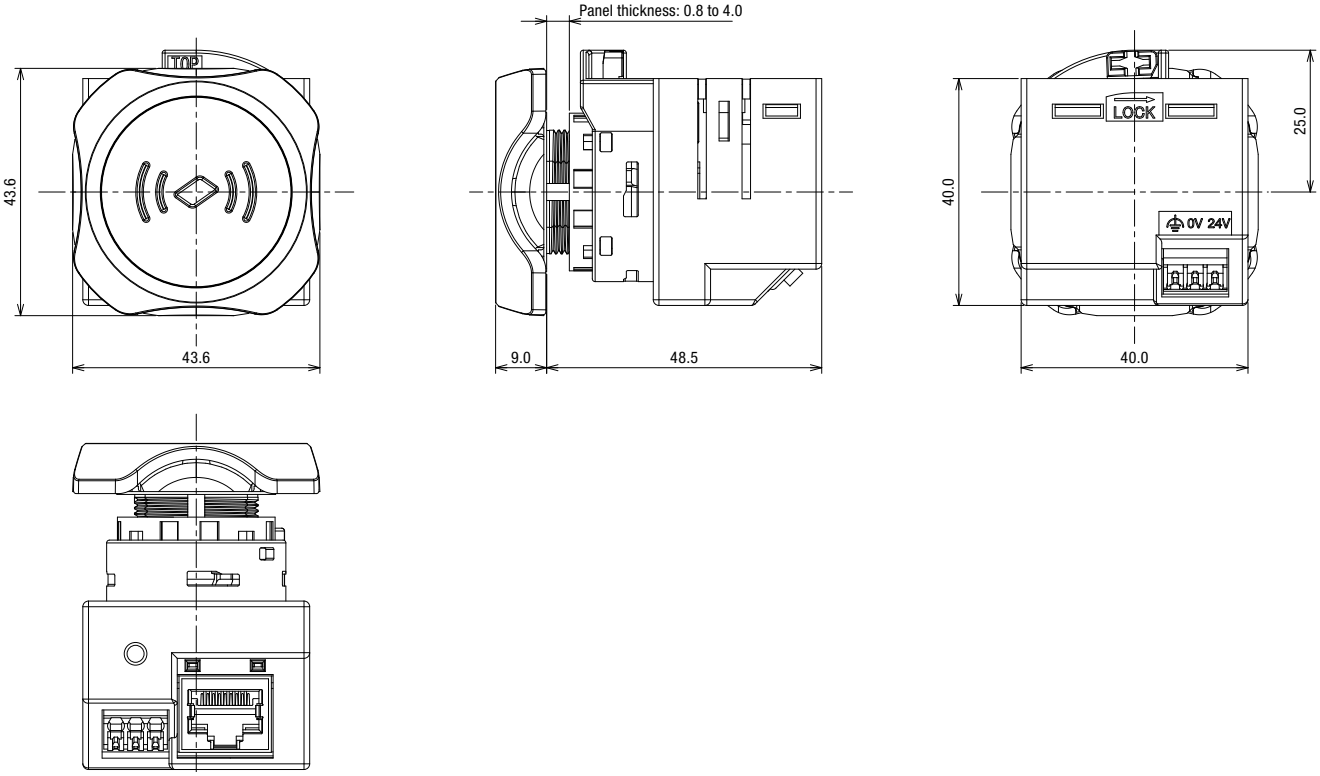

With holder: KW2D-RH100Q4E

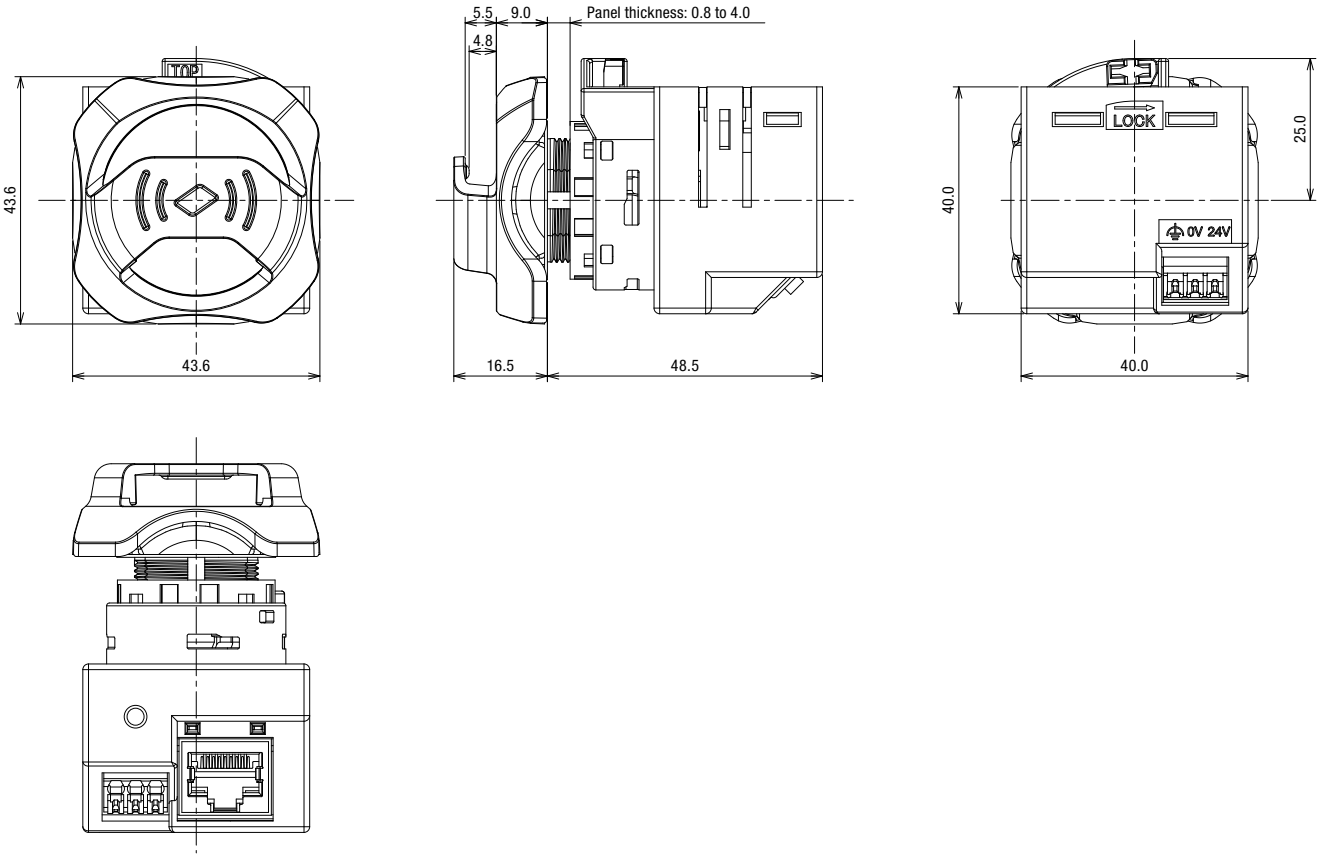

Dimensions

(Units: mm)

Tag

KEYFOB type: KW9Z-T1X1G, KW9Z-T1X2Y, KW9Z-T1X3R, KW9Z-T1X4S, KW9Z-T1X5B

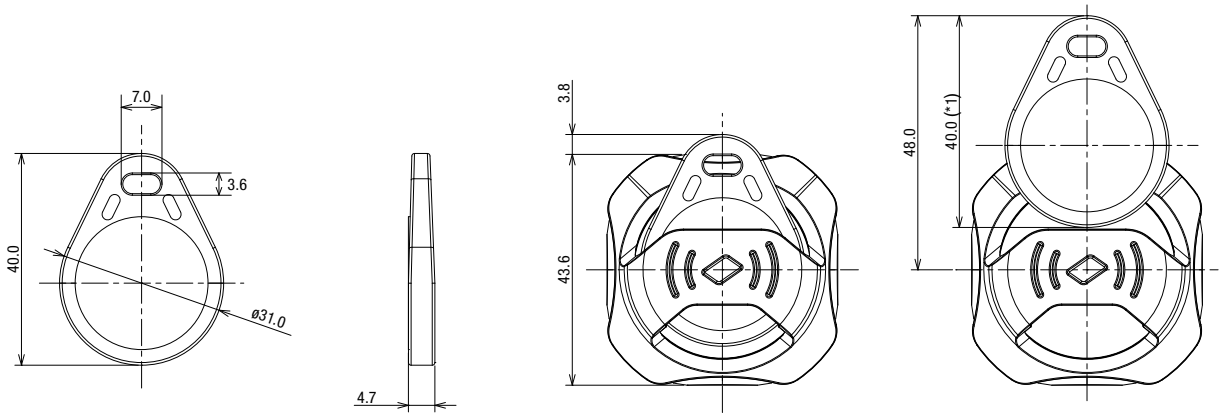

*1 Minimum size with KEYFOB attached.

Card type: KW9Z-T2X0

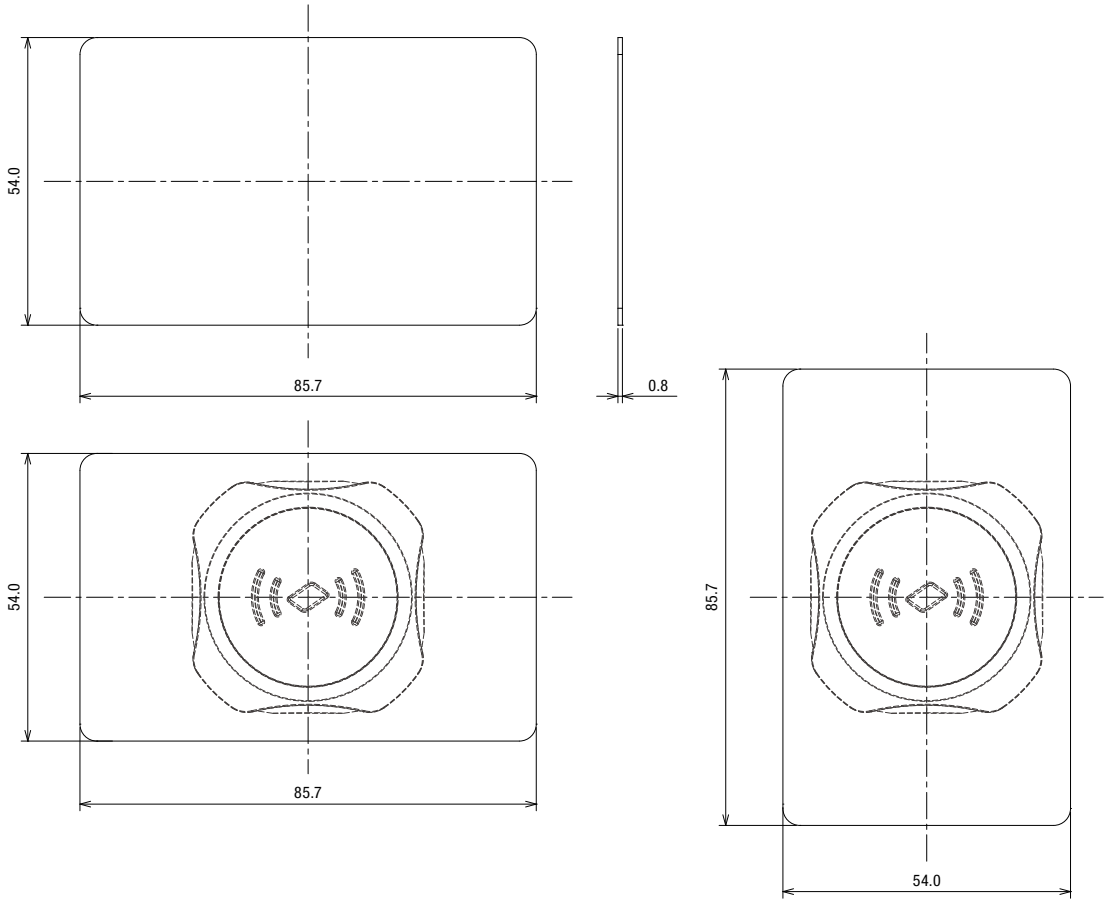

Cover

KW9Z-CV

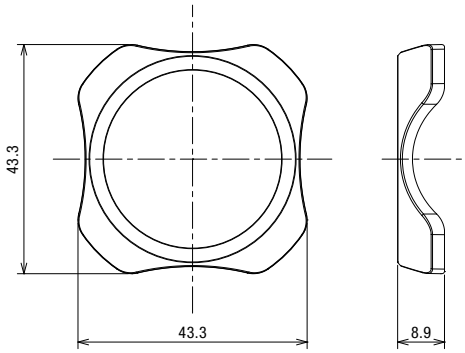

KW9Z-CVH

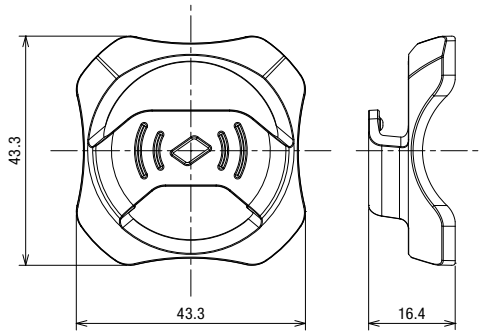

Safety Precautions

- Be sure to turn off the power before starting installation, removal, wiring, maintenance, and inspection work. Failure to turn power off may cause electrical shocks or fire hazard.

Precautions for Use

Installation and Wiring Precautions

Installation Space

Metal around the front unit will affect the reading distance of RFID tags. If the front unit is surrounded with metal, separate the metal from the front unit by 20mm or more.

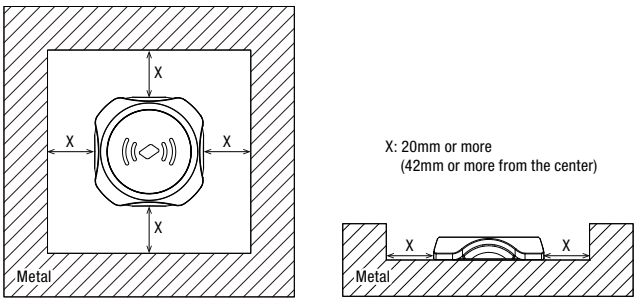

When Multiple Tags Are in the Reading Area

The wrong tag may be detected. Keep tags that should not be read 150mm or more from the area around the front unit.

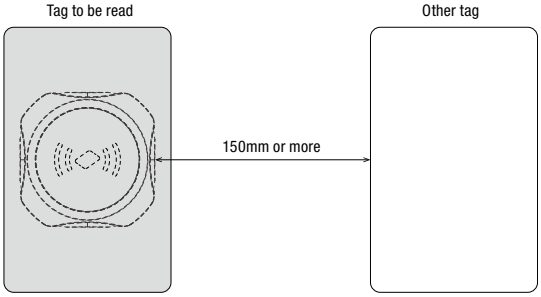

Removing the Back Unit

1) To remove the back unit from the front unit, press the lock lever (①) while turning it to the left.

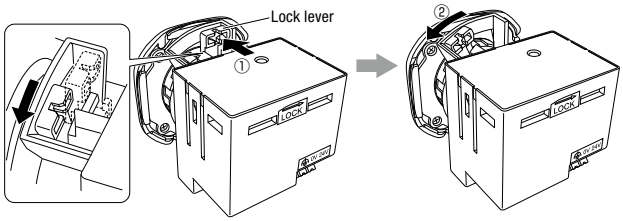

2) To attach the back unit, align the TOP marks on the front unit and the back unit, and then insert the back unit into the front unit. Turn the lock lever to the right to lock it.

Panel Mounting Method

Insert the front unit into the mounting hole from the front side of the panel, and install the locking ring from the back side of the panel.
Locking ring recommended tightening torque: 2.0N·m

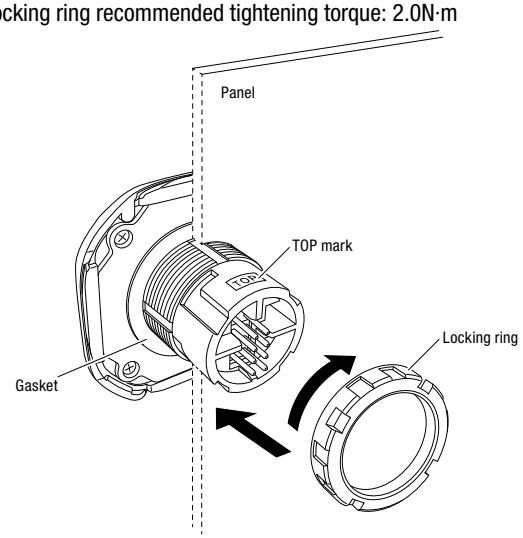

Attaching the Front Cover

1) Attach hook section B (long) of the front cover to the front unit.
2) Push hook section A (short) onto the front unit.
3) The cover (without holder) and cover (with holder) are installed in the same way.

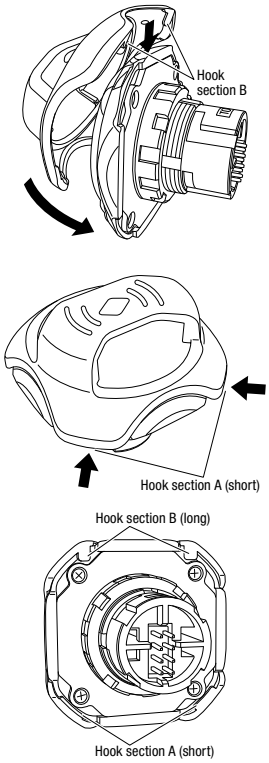

The front cover can be attached with a pitch of 90°.

Instructions

Applicable Wire

Power Supply Wiring

- The KW2D Series RFID Reader has a push-in style terminal block.
- An inrush current of 25A or lower (when input is 24V DC) flows when the power is turned on. Use a power supply with sufficient capacity.
- To prevent induction, keep the power line as short as possible, and as far away as possible from motor lines.
- The following table shows the signals that correspond to the signal codes. Be careful not to mistake the connections.

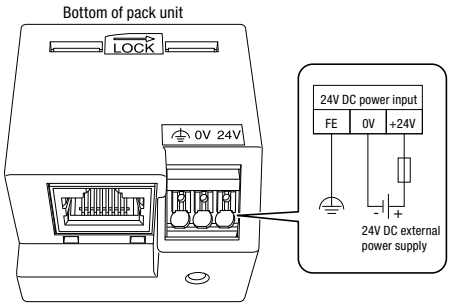

Label/Symbol	Signal Wire
24V	Power supply (+24V)
0V	Power supply (0V)
⏚	Functional ground (FE)

When wiring, use the applicable wires shown below.

Applicable Wire and Specifications

Applicable Wire	0.25 to 1.5mm² (AWG16 to 24)
Wire Strip Length (*1)	8 ± 1mm (*2)
Ferrule Size (*1)	H0.5 to H1.5 (without insulated cover)
	H0.25 to H0.75 (with insulated cover)

*1 For details on ferrules, see the "Wire Size and Recommended Ferrules" table below.
*2 Strip the sheath of the wire 8±1mm from the end.

Note: Make sure that the stranded wires do not loosen when using wiring without ferrules.

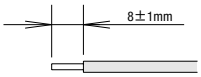

Wire Size and Recommended Ferrules

Ferrules with insulated covers

Applicable Wire (Stranded Wire)		Wire Strip Length	Part No.
AWG	mm²		
24	0.25	10mm	S3TL-H025-12WJ
22	0.34	10mm	S3TL-H034-12WT
20	0.50	10mm	S3TL-H05-14WA
18	0.75	10mm	S3TL-H075-14WW

Recommended Tools (Optional)

The following recommended tools can be used.

Name	Part No.
Insulated screwdriver	S3TL-D04-25-75
Crimping tool	S3TL-CR04T
	S3TL-CR06D
Stripping tool	S3TL-ST06

Crimping of Ferrules and Wiring

- Choose an appropriate ferrule for the wire.
- Cut the wire carefully to get a flat end.
- Make sure that ferrule sleeve is completely filled by the conductor. Depending on the cross section, the conductor should protrude approx. 0 to 1mm from the ferrule sleeve.

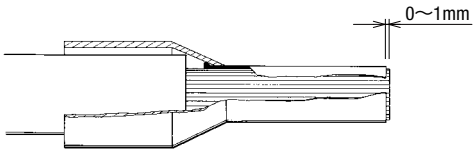

- When crimping, refer to the instructions of the crimping tool.

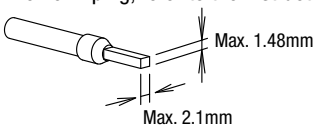

Faults which can occur during crimping:

- Cracks along the sides and die impressions
- Splitting of the ferrules
- Asymmetrical crimping shape
- Extreme burrs formed along the sides
- Ferrule not filled by conductor
- Single conductors pushed back by protruding from the insulated cover
- Single conductors squeezed off
- Insulation cover damaged by the crimping jaw
- Conductor insulation not pushed into the insulated cover
- Ferrule bent longitudinally after crimping

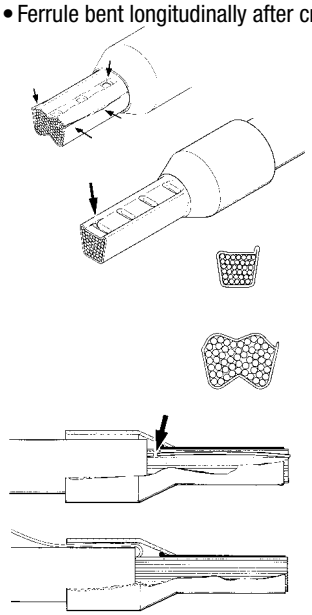

Formation of cracks at the sides, sides split open

Formation of cracks at the impressions of the crimping jaw

Asymmetrical crimping shape, burr formation on one side

Asymmetrical crimping shape, burr formation on one side

Single conductor squeezed off

Single conductor protruding

Ordering Terms and Conditions

Thank you for using IDEC Products.

By purchasing products listed in our catalogs, datasheets, and the like (hereinafter referred to as "Catalogs") you agree to be bound by these terms and conditions. Please read and agree to the terms and conditions before placing your order.

1. Notes on contents of Catalogs

(1) Rated values, performance values, and specification values of IDEC products listed in this Catalog are values acquired under respective conditions in independent testing, and do not guarantee values gained in combined conditions.
Also, durability varies depending on the usage environment and usage conditions.

(2) Reference data and reference values listed in Catalogs are for reference purposes only, and do not guarantee that the product will always operate appropriately in that range.

(3) The specifications / appearance and accessories of IDEC products listed in Catalogs are subject to change or termination of sales without notice, for improvement or other reasons.

(4) The content of Catalogs is subject to change without notice.

2. Note on applications

(1) If using IDEC products in combination with other products, confirm the applicable laws / regulations and standards.
Also, confirm that IDEC products are compatible with your systems, machines, devices, and the like by using under the actual conditions. IDEC shall bear no liability whatsoever regarding the compatibility with IDEC products.

(2) The usage examples and application examples listed in Catalogs are for reference purposes only. Therefore, when introducing a product, confirm the performance and safety of the instruments, devices, and the like before use. Furthermore, regarding these examples, IDEC does not grant license to use IDEC products to you, and IDEC offers no warranties regarding the ownership of intellectual property rights or non-infringement upon the intellectual property rights of third parties.

(3) When using IDEC products, be cautious when implementing the following.

i. Use of IDEC products with sufficient allowance for rating and performance

ii. Safety design, including redundant design and malfunction prevention design that prevents other danger and damage even in the event that an IDEC product fails

iii. Wiring and installation that ensures the IDEC product used in your system, machine, device, or the like can perform and function according to its specifications

(4) Continuing to use an IDEC product even after the performance has deteriorated can result in abnormal heat, smoke, fires, and the like due to insulation deterioration or the like. Perform periodic maintenance for IDEC products and the systems, machines, devices, and the like in which they are used.

(5) IDEC products are developed and manufactured as general-purpose products for general industrial products. They are not intended for use in the following applications, and in the event that you use an IDEC product for these applications, unless otherwise agreed upon between you and IDEC, IDEC shall provide no guarantees whatsoever regarding IDEC products.

i. Use in applications that require a high degree of safety, including nuclear power control equipment, transportation equipment (railroads / airplanes / ships / vehicles / vehicle instruments, etc.), equipment for use in outer space, elevating equipment, medical instruments, safety devices, or any other equipment, instruments, or the like that could endanger life or human health

ii. Use in applications that require a high degree of reliability, such as provision systems for gas / waterworks / electricity, etc., systems that operate continuously for 24 hours, and settlement systems

iii. Use in applications where the product may be handled or used deviating from the specifications or conditions / environment listed in the Catalogs, such as equipment used outdoors or applications in environments subject to chemical pollution or electromagnetic interference
If you would like to use IDEC products in the above applications, be sure to consult with an IDEC sales representative.

3. Inspections

We ask that you implement inspections for IDEC products you purchase without delay, as well as thoroughly keep in mind management/maintenance regarding handling of the product before and during the inspection.

4. Warranty

(1) Warranty period

The warranty period for IDEC products shall be one (1) year after purchase or delivery to the specified location. However, this shall not apply in cases where there is a different specification in the Catalogs or there is another agreement in place between you and IDEC.

(2) Warranty scope

Should a failure occur in an IDEC product during the above warranty period for reasons attributable to IDEC, then IDEC shall replace or repair that product, free of charge, at the purchase location / delivery location of the product, or an IDEC service base. However, failures caused by the following reasons shall be deemed outside the scope of this warranty.

i. The product was handled or used deviating from the conditions / environment listed in the Catalogs

ii. The failure was caused by reasons other than an IDEC product

iii. Modification or repair was performed by a party other than IDEC

iv. The failure was caused by a software program of a party other than IDEC

v. The product was used outside of its original purpose

vi. Replacement of maintenance parts, installation of accessories, or the like was not performed properly in accordance with the user's manual and Catalogs

vii. The failure could not have been predicted with the scientific and technical standards at the time when the product was shipped from IDEC

viii. The failure was due to other causes not attributable to IDEC (including cases of force majeure such as natural disasters and other disasters)

Furthermore, the warranty described here refers to a warranty on the IDEC product as a unit, and damages induced by the failure of an IDEC product are excluded from this warranty.

5. Limitation of liability

The warranty listed in this Agreement is the full and complete warranty for IDEC products, and IDEC shall bear no liability whatsoever regarding special damages, indirect damages, incidental damages, or passive damages that occurred due to an IDEC product.

6. Service scope

The prices of IDEC products do not include the cost of services, such as dispatching technicians. Therefore, separate fees are required in the following cases.

(1) Instructions for installation / adjustment and accompaniment at test operation (including creating application software and testing operation, etc.)

(2) Maintenance inspections, adjustments, and repairs

(3) Technical instructions and technical training

(4) Product tests or inspections specified by you

The above content assumes transactions and usage within your region. Please consult with an IDEC sales representative regarding transactions and usage outside of your region. Also, IDEC provides no guarantees whatsoever regarding IDEC products sold outside your region.

For details on installation, wiring, and maintenance, see the Instruction Sheet and User's Manual from the URL below.

URL: https://product.idec.com/?product=KW2D

IDEC Products

Flush Silhouette Switches

USB/RJ45 Relay Ports

CW

ø22

Projects only 2mm from the panel. Ideal for panels that require cleanliness and safety.

PLCs/Controllers/Operator Interfaces

Ethernet Switches

SX5E

Rugged design.Suitable for a range of applications. Unmanaged Ethernet switches equipped with various features.

Smart Relays

FL1F

Equipped with convenience and high functionality. Multiple power supply variations.

PLCs/Controllers

FC6A Plus/All-in-One

FC6A Plus is ideal for controlling not only large-size machines, but also entire small-size production lines. FC6A All-in-One has high performance and easy programming features.

PLCs/Controllers/Operator Interfaces

PLC / Controllers

FT1A Touch

3.8 inch

Built-in LCD enables control and display with high visibility.

Operator Interfaces

HG

Excellent visibility by super-bright LED backlight. Withstands harsh environments.

Safety Commander™

HT3P

Easily attaches to tablets of various sizes, improving safety and operability. Rotatable grip allows both vertical and horizontal use.

*) Photo shows the product mounted on a commercially-available tablet.

*) The tablet is not included with this product and must be prepared separately by the customer

Sensor Checker

USB Powered Portable Sensor Checker

SA1P

An external USB battery can be used enabling easy device testing and continuity check for 24V DC devices without power outlets near by.

IDEC CORPORATION

Head Office 6-64, Nishi-Miyahara-2-Chome, Yodogawa-ku, Osaka 532-0004, Japan

www.idec.com

USA	IDEC Corporation	**Singapore**	IDEC Izumi Asia Pte. Ltd.	**China**	IDEC (Shanghai) Corporation	**Japan**	IDEC Corporation
EMEA	APEM SAS	**Thailand**	IDEC Asia (Thailand) Co., Ltd.		IDEC Hong Kong Co. Ltd.		
		India	IDEC Controls India Private Ltd.	**Taiwan**	IDEC Taiwan Corporation		

Specifications and other descriptions in this brochure are subject to change without notice.
Information in this brochure is current as of September, 2025.
2025 IDEC Corporation, All Rights Reserved.

EP1741-8