# KW2D Series Smart RFID Reader
# User's Manual

Thank you for purchasing this IDEC product. Before using this product, please confirm that there are no mistakes with your order. Carefully read this manual and use this product correctly.

# SAFETY PRECAUTIONS

- Read the "KW2D Series User's Manual" to ensure correct operation before starting installation, wiring, operation, maintenance, and inspection of the KW2D Series.
- All KW2D Series modules are manufactured under IDEC's rigorous quality control system, but users must add a backup or failsafe provision to the control system when using the KW2D Series in applications where heavy damage or personal injury may be caused, in case the KW2D Series should fail.
- Implement security measures, such as those for unauthorized access to this product from external devices, on the network system side. IDEC Corporation bears no responsibility for losses, damages, and/or other expenses that occur directly or indirectly as a result of unauthorized access or other security failures.
- As a security measure, always use a firewall or another tool and block accessible IP addresses and ports.
- In this manual, safety precautions are categorized in order of importance:

Warning notices are used to emphasize that improper operation may cause severe personal injury or death.

Caution notices are used where inattention might cause personal injury or damage to equipment.

---

- This product is not designed for use in applications requiring a high degree of reliability and safety, such as applications for medical devices, nuclear power, railroads, aerospace, and automotive devices. The KW2D Series should not be used for such applications.
- Turn off the power to the KW2D Series before installation, removal, wiring, maintenance, and inspection of the KW2D Series. Failure to turn power off may cause damage, electrical shocks or fire hazard. If such a circuit is configured inside the KW2D Series, Failure of the KW2D Series may cause disorder of the control system, damage, or accidents.
- Special expertise is required to install, wire, and operate the KW2D Series. People without such expertise must not use the KW2D Series.
- Install the KW2D Series according to the instructions described in the "KW2D Series User's Manual". Improper installation will result in falling, failure, or malfunction of the KW2D Series.

---

- Install the KW2D Series in environments described in the "KW2D Series User's Manual". If the KW2D Series is used in places where the KW2D Series is subjected to high-temperature, high-humidity, condensation, corrosive gases, excessive vibrations, or excessive shocks, then electrical shocks, fire hazard, or malfunction will result.
- Prevent the KW2D Series from falling while moving or transporting the KW2D Series, otherwise damage or malfunction of the KW2D Series will result.
- Wiring must use lead sizes that are appropriate for the applied voltage and current.
- Prevent metal fragments and pieces of wire from dropping inside the KW2D Series housing. Put a cover on the KW2D Series modules during installation and wiring. Ingress of such fragments and chips may cause fire hazard, damage, or malfunction.
- Use SELV power supply that is reinforced or double-insulated from MAINS without any risk of electric shock, and Limited Energy (LIM) Circuit.
- Do not disassemble, repair, or modify the KW2D Series modules. There is a risk of serious accident, such as electric shock, damage, fire, and malfunction.
- When disposing of the KW2D Series, do so in accordance with national and local regulations.
- This product has been certified by the Radio Law of all countries involved. For details, refer to "Regarding Laws and Compatible Standards" on page Preface-4.

---

**Note**

- This equipment has been tested and found to comply with the limits for a Class A digital device, pursuant to part 15 of the FCC Rules. These limits are designed to provide reasonable protection against harmful interference when the equipment is operated in a commercial environment. This equipment generates, uses, and can radiate radio frequency energy and, if not installed and used in accordance with the instruction manual, may cause harmful interference to radio communications. Operation of this equipment in a residential area is likely to cause harmful interference in which case the user will be required to correct the interference at his own expense.
- Use a Category 5 or higher STP shielded cable for the LAN cable.

| Symbol | Meaning |
|---|---|
| ⚠ | Reference to web manual with QR code. |
| ⏚ | Ground the functional ground terminal to ensure stable operation fo the equipment. |

# Introduction

This manual describes the functions, configuration methods, and safety precautions of the KW2D Series Smart RFID Reader and the KW RFID Configurator configuration software.

Read this manual to ensure the correct understanding of the functions and performance of the KW2D Series Smart RFID Reader and the KW RFID Configurator configuration software. Store this manual carefully so it can be read at any time.

IDEC Corporation makes the latest product manual PDFs available on our website at no additional cost. Please download the latest product manual PDFs from our website.

## Publication History

September 2020: First Edition
December 2020: Second Edition
February 2021: Third Edition
July 2021: Fourth Edition
August 2021: Fifth Edition
December 2022: Sixth Edition
October 2024: Seventh Edition

## Notes

- IDEC Corporation holds all rights related to this manual and the KW RFID Configurator. Unauthorized duplication, reprinting, sales, transfers, and leasing are prohibited.
- The contents of this manual and the KW RFID Configurator may change without prior notification.
- IDEC Corporation bears no responsibility for the results of using this manual or the KW RFID Configurator.
- We have taken all possible measures with the content of this product, but if you notice any portions that are unclear, or any mistakes, please contact the dealer where purchased, an IDEC sales office, or the customer service line.
- This product cannot be directly connected to the communication lines (including public wireless LAN) of telecommunication carriers (mobile communication companies, fixed-line communication companies, Internet providers, etc.). When connecting this product to the Internet, be sure to connect via a device, such as a router.

## Trademarks

- Microsoft and Windows are registered trademarks or trademarks of Microsoft Corporation in the United State and other countries.
- FeliCa is a registered trademark of Sony Corporation.
- Mifare is a registered trademark of NXP Semiconductors.
- CC-Link, CC-Link IE Field Basic, and SLMP are registered trademarks of Mitsubishi Electric Corporation.
- EtherNet/IP is a registered trademark of ODVA, Inc.
- Other company names and product names used in this manual are the trademarks or registered trademarks of their respective companies.

# Regarding Laws and Compatible Standards

The laws and regulations, and conforming standards of all countries involved supported by this product are as follows.

**European laws and standards**

- EMC Directive
- RoHS Directive
- Radio Equipment Directive

To comply with these directives, this product has been designed and evaluated on the basis of the following international and European standard.

- IEC/EN 61131-2
- ISO/IEC 18000-3
- ISO/IEC 14443 Type A
- ISO/IEC 18092
- JIS X6319-4
- ISO/IEC 15693

**EU Authorized Representative:APEM SAS**
55, Avenue Edouard Herriot BP1, 82303 Caussade Cedex, France

**United Kingdom laws and standards**
This product complies with the following UK legislation.

- Electromagnetic Compatibility Regulations 2016
- The Restriction of the Use of Certain Hazardous Substances in Electrical and Electronic Equipment Regulations 2012
- Radio Equipment Regulations 2017

**UK Authorized Representative: APEM COMPONENTS LIMITED**
Drakes Drive, Long Crendon, Buckinghamshire, HP18 9BA, UK

**North America laws and standards**

- UL61010-1/CAN/CSA C22.2 No. 61010-1-12
- UL 61010-2-201

**RFID communication standards**

- ISO/IEC 14443 Type A
- ISO/IEC 18092
- JIS X6319-4
- ISO/IEC 15693

**Radio law certification**

- FCC (USA)
- ISED (Canada)
- MIC (Japan)
- NBTC (Thailand)
- NCC (Taiwan)
- Radio Equipment Directive (EU)
- WPC (India)
- IFT (Mexico) *KW2D-R100Q4E only

**Requirements for each standard**

- FCC:

  FCC CAUTION
  Changes or modifications not expressly approved by the party responsible for compliance could void the user's authority to operate the equipment.

  **Supplier's Declaration of Conformity**
  **47 CFR § 2.1077 Compliance Information**
  Unique Identifier: KW2D-R100Q4E or KW2D-RH100Q4E
  Responsible Party – U.S. Contact Information
  IDEC Corporation
  1175 Elko Drive, Sunnyvale, CA 94089-2209, USA
  Tel: +1-408-747-0550 opencontact@idec.com

  FCC Compliance Statement
  This device complies with Part 15 of the FCC Rules. Operation is subject to the following two conditions: (1) This device may not cause harmful interference, and (2) this device must accept any interference received, including interference that may cause undesired operation.

- FCC, ISED:

  This device complies with part 15 of FCC Rules and Innovation, Science and Economic Development Canada's licenceexempt RSS(s). Operation is subject to the following two conditions: (1) this device may not cause harmful interference, and (2) this device must accept any interference received, including interference that may cause undesired operation.

  Le présent appareil est conforme à la partie 15 des règles de la FCC et aux normes des CNR d'Innovation, Sciences et Développement économique Canada applicables aux appareils radio exempts de licence. L'exploitation est autorisée aux deux conditions suivantes : (1) l'appareil ne doit pas produire de brouillage, et (2) l'appareil doit accepter tout brouillage subi, même si le brouillage est susceptible d'en compromettre le fonctionnement.

- NBTC:

  เครื่องโทรคมนาคมและอุปกรณ์นี้ มีความสอดคล้องตามมาตรฐานหรือข้อกำหนดทางเทคนิคของ กสทช.

- NCC:

  本器材須經專業工程人員安裝及設定，始得設置使用，且不得直接販售給一般消費者

  低功率電波輻射性電機管理辦法第十條
  第十二條
  經型式認證合格之低功率射頻電機，非經許可，公司、商號或使用者均不得擅自變更頻率、加大功率或變更原設計之特性及功能。
  第十四條
  低功率射頻電機之使用不得影響飛航安全及干擾合法通信；經發現有干擾現象時，應立即停用，並改善至無干擾時方得繼續使用。
  前項合法通信，指依電信法規定作業之無線電通信。低功率射頻電機須忍受合法通信或工業、科學及醫療用電波輻射性電機設備之干擾。

- Radio Equipment Directive:

  Electromagnetic waves are generated from the front unit, so—excluding when using tags—stay more than 5 cm away from the front unit.

For details on applicable standards and EU directives, please contact the dealer where purchased or check the IDEC website.

# About the Warranty of the Products

**(1) Warranty Period**

The warranty period for IDEC products shall be one (1) year after purchase or delivery to the specified location. However, this shall not apply in cases where there is a different specification in the Catalogs or there is another agreement in place between you and IDEC.

**(2) Extent of Warranty**

Should a failure occur in an IDEC product during the above warranty period for reasons attributable to IDEC, then IDEC shall replace or repair that product, free of charge, at the purchase location / delivery location of the product, or an IDEC service base.
However, failures caused by the following reasons shall be deemed outside the scope of this warranty.

i. The product was handled or used deviating from the conditions/environment listed in the Catalogs
ii. The failure was caused by reasons other than an IDEC product
iii. Modification or repair was performed by a party other than IDEC
iv. The failure was caused by a software program of a party other than IDEC
v. The product was used outside of its original purpose
vi. Replacement of maintenance parts, installation of accessories, or the like was not performed properly in accordance with the user's manual and Catalogs
vii. The failure could not have been predicted with the scientific and technical standards at the time when the product was shipped from IDEC.
viii. The failure was due to other causes not attributable to IDEC (including cases of force majeure such as natural disasters and other disasters

In addition, the indemnification means the warranty just for our product, and any damages caused by the failure of our product shall be excluded from the warranty.

**(3) Extent of Service**

The prices of IDEC products do not include the cost of services, such as dispatching technicians. Therefore, separate fees are required in the following cases.

i. Instruction for installment and visiting for test operation, including, but not limited to creating application software and operation
tests; and
ii. Maintenance and inspection, arrangement and repair; and
iii. Technical assistance and technical education; and
iv. Product test and inspection based on you request.

# Abbreviations, Names, and Terms

| Item | Description |
|---|---|
| **KW2D Series Smart RFID Reader** | The general term for this product.<br>KW2D-R100Q4E, KW2D-RH100Q4E |
| **KW2D special tag** | The general term for this product's special tags.<br>KW9Z-T1**, KW9Z-T2** |
| **RFID tag** | The general term for RF tags and non-contact IC cards that support IC tag standards. |
| **Non-contact IC card** | The general term for card type RF tags that support IC tag standards. |
| **IC tag standards** | Standards for RFID tags. |
| **UID** | An abbreviation for unique identifier.<br>A unique ID number stored in the RFID tag that cannot be overwritten. It is a data string with a maximum length of 10 bytes. |
| **Authority** | One byte of information associated with the UID. |
| **Tag list** | A list to which UIDs and authorities are registered. |
| **Name1, Name2** | Text strings that can be set as desired in the tag list. |
| **Tag information** | The general term for the UID, authority, Name1, and Name2 to register for a tag. |
| **Project** | General term for all data including KW2D Series Smart RFID Reader settings and tag list with UID and authority registered. |
| **KW RFID Configurator** | Software for making various settings and checking the operation of the KW2D Series Smart RFID Reader. |
| **Master tag** | RFID tag with the function to register or invalidate tag information. |
| **Host device** | The device that communicates with the KW2D Series Smart RFID Reader to control whether the target system can be operated. |
| **Shared memory** | Memory of KW2D Series Smart RFID Reader that can be accessed from the host device. |
| **Lock operation** | The operation to keep the tag information in the shared memory. |
| **Lock operation time** | The time from when the lock operation is started until the lock operation ends. |
| **Host communication** | Modbus TCP Server communication (port number 502), EtherNet/IP communication (port number 2222/44818), CC-Link IE Field Basic communication (port number 61450/61451) and event transmission.<br>This communication is performed by selecting the Number "1" in the Connection Settings on the RFID Reader Settings tab of KW RFID Configurator. |
| **EtherNet/IP** | Industrial communication network protocol advocated by ODVA (ODVA. Inc.). It has become an international standard as IEC61158 and is also certified as SEMI standard E54.13. |
| **EtherNet/IP communication** | Abbreviation for Ethernet Industrial Protocol. Industrial multi-vendor network using Ethernet. |
| **EtherNet/IP device** | Generic term for devices that support EtherNet/IP communication. This product supports EtherNet/IP communication (adapter). |
| **EtherNet/IP Scanner** | An EtherNet/IP device that works as the master in EtherNet/IP communication. In general, it has two functions: one is to receive requests to open CIP connections and the other is to request them. |
| **EtherNet/IP Adapter** | An EtherNet/IP device that works as the slave in EtherNet/IP communication. In general, it has the function to receive the request to open a CIP connection. |
| **CC-Link IE Field Basic** | CC-Link IE Field Basic is an industrial communication network advocated by the CC-Link Association. This network is suitable for small-scale devices that can perform cyclic communication using universal 100 Mbps Ethernet. |
| **CC-Link IE Field Basic device** | Gneral term for devices that support CC-Link IE Field Basic communication. This product supports CC-Link IE Field Basic communication (slave station). |
| **Event Transmission** | When an RFID tag is detected, the data is sent to the host device in the specified format. |

# Symbols Used in the Manual

The following symbols are used in the manual to simplify the descriptions.

| Symbol | Meaning |
|---|---|
| Warning | Indicates information about items that carry the risk of death or serious injury if the product is used improperly. |
| Caution | Indicates information about items that carry the risk of personal injury or physical damage if the product is used improperly. |
| | Indicates information about items that must be observed or that are easily mistaken when using the product. |
| | Indicates supplemental information about an item or helpful information that you should know. |

# Contents

SAFETY PRECAUTIONS ..... Preface-1
Introduction ..... Preface-3
Publication History ..... Preface-3
Notes ..... Preface-3
Trademarks ..... Preface-3
Regarding Laws and Compatible Standards ..... Preface-4
About the Warranty of the Products ..... Preface-6
Abbreviations, Names, and Terms ..... Preface-7
Symbols Used in the Manual ..... Preface-8

**Chapter 1 Overview of the KW2D Series Smart RFID Reader ..... 1-1**

1 Introduction to the KW2D Series Smart RFID Reader ..... 1-1
2 Type Numbers ..... 1-1
3 Type Numbers and Functions List ..... 1-2
4 KW2D Series Smart RFID Reader Features ..... 1-3
5 KW2D Series Smart RFID Reader Functions ..... 1-4
6 System Configuration ..... 1-5
7 Introduction to the KW RFID Configurator ..... 1-6

**Chapter 2 Product Specifications ..... 2-1**

1 Specifications ..... 2-1
1.1 KW2D Series Smart RFID Reader ..... 2-1
1.2 KW2D Special Tag ..... 2-4
2 Part Names and Functions ..... 2-5
3 Dimensions ..... 2-7
3.1 Main unit ..... 2-7
3.2 RFID tags ..... 2-8
3.3 Front cover ..... 2-8

**Chapter 3 Installation and Wiring ..... 3-1**

1 Installation and Wiring Precautions ..... 3-1
1.1 Installation Space ..... 3-1
2 How to install and remove ..... 3-2
2.1 Back unit ..... 3-2
2.2 Front cover ..... 3-4
2.3 How to mount to a panel ..... 3-6
3 Drilling the Mounting Hole ..... 3-8
3.1 Mounting Hole Layout ..... 3-8
3.2 Installation example ..... 3-8

4 Power Supply and Power Supply Wiring ..... 3-9
4.1 Power Supply ..... 3-9
4.2 Power Supply Voltage ..... 3-9
4.3 Power Supply Terminal Wiring ..... 3-9
4.4 Power Supply Terminal Block Wiring Method ..... 3-10
5 Terminals ..... 3-12
5.1 Terminals for the Terminal Block ..... 3-12
5.2 Applicable Wire ..... 3-14
5.3 Recommended Tools ..... 3-15
6 Wiring Directions and Panel Indicators ..... 3-16

**Chapter 4 Communication Function ..... 4-1**

1 Modbus TCP Communication (Server) ..... 4-1
1.1 Communication Specifications ..... 4-1
1.2 Communication data format ..... 4-1
1.3 Modbus TCP Communication Shared Memory ..... 4-6
2 EtherNet/IP Communication (Adapter) ..... 4-13
2.1 Overview ..... 4-13
2.2 EtherNet/IP Adapters ..... 4-15
2.3 EtherNet/IP adapter (Class 3/UCMM communication) ..... 4-26
3 CC-Link IE Field Basic Communication (Slave station) ..... 4-33
3.1 Overview ..... 4-33
3.2 CC-Link IE Field Basic (Slave Station) ..... 4-34
4 Event Transmission (TCP, UDP) ..... 4-42
4.1 Overview ..... 4-42
5 Maintenance Communication (Server) ..... 4-45
5.1 Communication Specifications ..... 4-45
5.2 Functions ..... 4-46

**Chapter 5 Functions and Settings ..... 5-1**

1 KW2D Series Smart RFID Reader Statuses and Operations ..... 5-1
1.1 Operation Mode ..... 5-1
1.2 Detection Mode ..... 5-3
1.3 Lock Mode ..... 5-8
1.4 Adjusting the RFID Tag Detection Sensitivity ..... 5-10
2 KW2D Series Smart RFID Reader Functions ..... 5-11
2.1 Shared Memory ..... 5-11
2.2 Operate the KW2D Smart RFID Reader ..... 5-18
2.3 Edit the tag list ..... 5-20

**Chapter 6 KW RFID Configurator ..... 6-1**

1 Overview of the KW RFID Configurator ..... 6-1
1.1 Operating Environment ..... 6-1
1.2 Installing the Software ..... 6-1

1.3 Uninstalling the Software....6-1
1.4 Starting and Exiting the Software....6-1
2 Configuration and Functions....6-2
2.1 Configuration of the KW RFID Configurator....6-2
2.2 Menu Bar....6-3
2.3 Toolbar....6-3
2.4 Settings Tabs....6-4
3 Projects....6-16
3.1 Creating New Project....6-16
3.2 Open Project....6-16
3.3 Saving project....6-16
3.4 Saving project as....6-16
3.5 Changing Project Properties....6-17
4 Online....6-18
4.1 Download project....6-18
4.2 Upload Project....6-22
4.3 Monitor the KW2D Series Smart RFID Reader....6-23
4.4 Configure the communication settings of the computer that uses KW RFID Configurator....6-25
4.5 Initialize the KW2D Smart RFID Reader....6-25
5 Help....6-27
5.1 Opening the manual....6-27
5.2 Checking the KW RFID Configurator Version Number....6-27

**Chapter 7 Troubleshooting....7-1**

1 Check status....7-1
1.1 LED....7-1
1.2 Input Relays....7-1
2 Troubleshooting....7-2

**Index**

# Chapter 1 Overview of the KW2D Series Smart RFID Reader

This chapter describes an overview of the KW2D Series Smart RFID Reader and its system configuration.



## 1 Introduction to the KW2D Series Smart RFID Reader

The KW2D Series Smart RFID Reader is an RFID reader equipped with a verification function. Both KEYFOB type and card type RFID tags are supported.
The KW2D Series Smart RFID Reader can work with a host device using communication functions, such as maintenance communication server and Modbus TCP Server. Use the KW RFID Configurator for the creation and management of RFID tags and projects that are used with the KW2D Series Smart RFID Reader.

## 2 Type Numbers

This section gives the type numbers for the Main unit, KW2D special tag, and replacement parts.

● Main unit

KW2D - R 1 00 Q4 E

Communication type
E : Ethernet

Power supply
Q4 : 24V DC power type

Version
1 : Version 1

KEYFOB Front cover
R : Standard type
RH : Holder type

● KW2D Special Tag

KW9Z - T1 X1G

Authority (KEYFOB color)
X1G : Authority 1 (green)
X2Y : Authority 2 (yellow)
X3R : Authority 3 (red)
X4S : Authority 4 (blue)
X5B : Authority 5 (black)

Tag type
T1 : KEYFOB
T2 : CARD*1

● Front cover

KW9Z - CV

Shape
CV : Standard type (For KW2D-R)
CVH : Holder type (For KW2D-RH)

*1 Card type is "KW9Z-T2X0 (X0: Authority 10)" only.

# 3 Type Numbers and Functions List

● Main unit

| Type No. | Power Supply | Ethernet Port | Holder |
|---|---|---|---|
| KW2D-R100Q4E | 24V DC | Yes | None |
| KW2D-RH100Q4E | 24V DC | Yes | Yes |

● KW2D Special Tag

| Type No. | Tag Type | Tag Color | Default Authority | | | | | |
|---|---|---|---|---|---|---|---|---|
| | | | 1 | 2 | 3 | 4 | 5 | 10 |
| KW9Z-T1X1G | KEYFOB | Green | Yes | - | - | - | - | - |
| KW9Z-T1X2Y | | Yellow | - | Yes | - | - | - | - |
| KW9Z-T1X3R | | Red | - | - | Yes | - | - | - |
| KW9Z-T1X4S | | Blue | - | - | - | Yes | - | - |
| KW9Z-T1X5B | | Black | - | - | - | - | Yes | - |
| KW9Z-T2X0 | CARD | - | - | - | - | - | - | Yes |

For details on product specifications, refer to Chapter 2 "Product Specifications" on page 2-1.

# 4 KW2D Series Smart RFID Reader Features

The KW2D Series Smart RFID Reader is a compact RFID reader that is compatible with Φ22 holes on the panel surface.
It is equipped with an Ethernet port which enables communication with host devices that support Ethernet communication such as programmable displays and PLCs and maintenance communication with computers.

## ● Panel Surface Mounted

This RFID reader can be mounted in a 22-mm diameter hole.

## ● Communication Functions

The KW2D Series Smart RFID Reader can connect to host devices such as programmable displays and PLCs, as well as computers that have KW RFID Configurator installed.
The KW2D Series Smart RFID Reader supports the following communication functions.

### ■ Communication with host devices

| | |
|---|---|
| **Modbus TCP Server** | Modbus TCP Server can be used to exchange data between the KW2D Series Smart RFID Reader and a host device that supports the Modbus TCP client protocol. For details, refer to Chapter 4 "1 Modbus TCP Communication (Server)" on page 4-1. |
| **EtherNet/IP Communication** | It is possible to exchange data between a host device supporting CC-Link IE Field Basic communication and the KW2D Series Smart RFID Reader. For details, refer to Chapter 4 "2 EtherNet/IP Communication (Adapter)" on page 4-13. |
| **CC-Link IE Field Basic communication** | It is possible to exchange data between a host device supporting EtherNet/IP communication and the KW2D Series Smart RFID Reader. For details, refer to Chapter 4 "3 CC-Link IE Field Basic Communication (Slave station)" on page 4-33. |
| **Event Transmission** | When the KW2D Series Smart RFID Reader detects the RFID tag, the data is sent to the specified host device in the specified format. For details, refer to Chapter 4 "4 Event Transmission (TCP, UDP)" on page 4-42. |

### ■ Maintenance

| | |
|---|---|
| **Maintenance Communication Server** | You can upload and download the project or monitor UIDs detected by the KW2D Series Smart RFID Reader. For details, refer to Chapter 4 "5 Maintenance Communication (Server)" on page 4-45. |
| **Find RFID Readers** | You can find the RFID readers connected to the network. For details, refer to Chapter 6 "RFID Reader List Dialog Box" on page 6-20. |

# 5 KW2D Series Smart RFID Reader Functions

## ● Read UID Function

The KW2D Series Smart RFID Reader is equipped with an RFID antenna (13.56 MHz band) and can read the UID of the KW2D special tag and the general-purpose card type RFID tag.
The following IC tag standards are supported.

| IC Tag Standard | Non-contact IC Card and Tag Name |
|---|---|
| ISO/IEC 14443 Type A | MIFARE (NXP) |
| ISO/IEC18092 Type F | FeliCa (Sony) |
| ISO/IEC15693 Type V | Tag-it (Texas Instruments), I-CODE (NXP) |

With the factory settings, the RFID reader detects RFID tags that support the three types of IC tag standards. On the **RFID Reader Settings** tab of the KW RFID Configurator, in the **Tag Read Settings**, you can change the RFID tags detected. For details, refer to Chapter 6 "IC Tag Standard" on page 6-12.

## ● UID Verification Function

This function verifies the UID in the RFID tag against UIDs that were registered in advance. UIDs are registered on the **Tag List** tab in KW RFID Configurator. Since a 1-byte authority (1 to 255) can be specified for each UID, the UID to be registered can be distributed to 255 types of authority. A maximum of 500 items of tag information can be registered.
The tag information obtained in verification can be read by the host device and used to restrict the operation of equipment and to manage the usage history.

**Tag Information Contents**

| Tag Information | Description | Explanation |
|---|---|---|
| UID | Maximum 10 bytes of data | Except for a complete match of UID, the verification result is a failure. |
| Name1 | Maximum 18 bytes | Used to explain the UID. This information is not used by the KW2D Series Smart RFID Reader. |
| Name2 | Maximum 18 bytes | |
| Authority | 1 byte (1 to 255) | When an unregistered UID in the tag list or a disabled UID is read, the authority is 0. |

## ● Status Confirmation Function

The operating status and error status of the KW2D Series Smart RFID Reader can be checked with the buzzer and the LED indicators (white, green, and red) on the front of the KW2D Series Smart RFID Reader.

The buzzer and LED indicators can be enabled or disabled. The buzzer and LED indicators can also be controlled from the host device. For details, refer to Chapter 5 "Operate the buzzer and LED" on page 5-19.

## ● Tag list editing function

Up to 500 tag information can be registered in the tag list of the KW2D Series Smart RFID Reader. The tag list of the KW2D Series Smart RFID Reader can be edited by using the master tag or host device. For details, refer to Chapter 5 "2.3 Edit the tag list" on page 5-20.

# 6 System Configuration

There are two system configurations for using theKW2D Series Smart RFID Reader: the system configuration used for actual operation and the system configuration for creating a project for operation.
Use the KW RFID Configurator dedicated configuration software to create a project.

## ● System Configuration During Operation

The KW2D Series Smart RFID Reader can be used in the following system configuration. The devices that can be connected depend on the model. For details, refer to Chapter 2 "Product Specifications" on page 2-1.

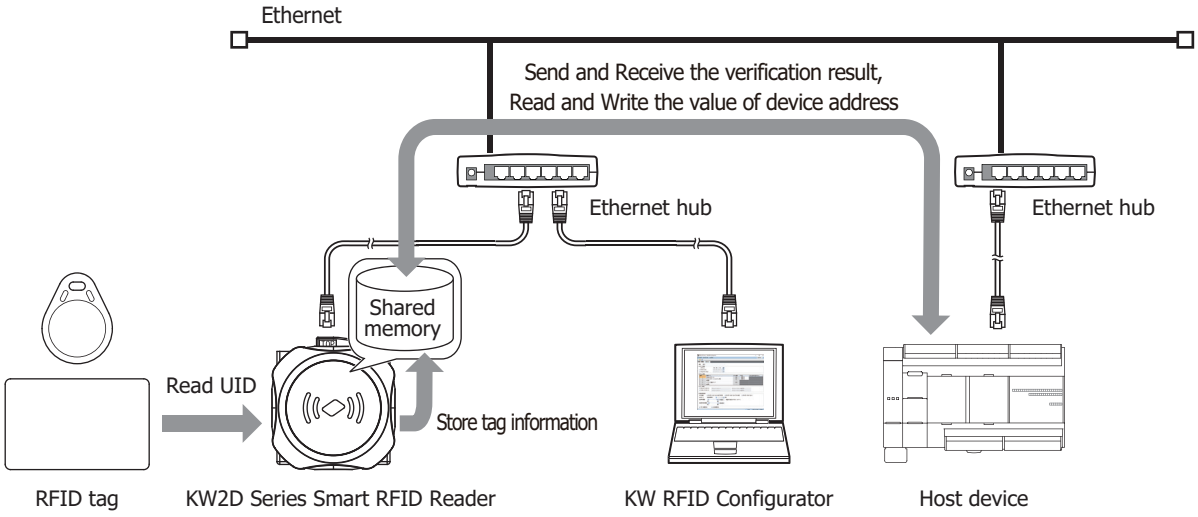


Supported communication protocols are Modbus TCP communication, EtherNet/IP communication, CC-Link IE Field Basic communication, and event transmission. For details, refer to Chapter 4 "Communication Function" on page 4-1.

## ● System Configuration During Project Creation

To use the KW2D Series Smart RFID Reader, create and download a project to it.
Use the KW RFID Configurator to create the project. You can connect the KW2D Series Smart RFID Reader to a computer and download the created project over Ethernet communication.

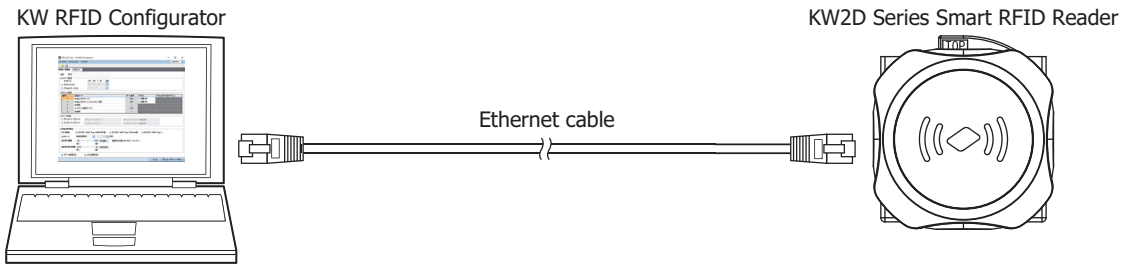

# 7 Introduction to the KW RFID Configurator

The KW RFID Configurator is dedicated software for the KW2D Series Smart RFID Reader to monitor tag information read by the KW2D Series Smart RFID Reader, configure the KW2D Series Smart RFID Reader settings, and create tag lists.
Build the environment required for operation by using the KW RFID Configurator to create a project and downloading that project to the KW2D Series Smart RFID Reader.
The KW RFID Configurator has the following functions.

● Create Project

You need to configure the KW2D Series Smart RFID Reader settings and create the tag list. For details, refer to Chapter 6 "3 Projects" on page 6-16.

● Search KW2D Series Smart RFID Reader

You can search for IP addresses of the KW2D Series Smart RFID Reader. The default IP address of the KW2D Series Smart RFID Reader is 192.168.1.50. For details, refer to Chapter 6 "Find button" on page 6-20.

● KW2D Series Smart RFID Reader Monitor

You can monitor the status of the KW2D Series Smart RFID Reader and the UIDs. For details, refer to Chapter 6 "4.3 Monitor the KW2D Series Smart RFID Reader" on page 6-23.

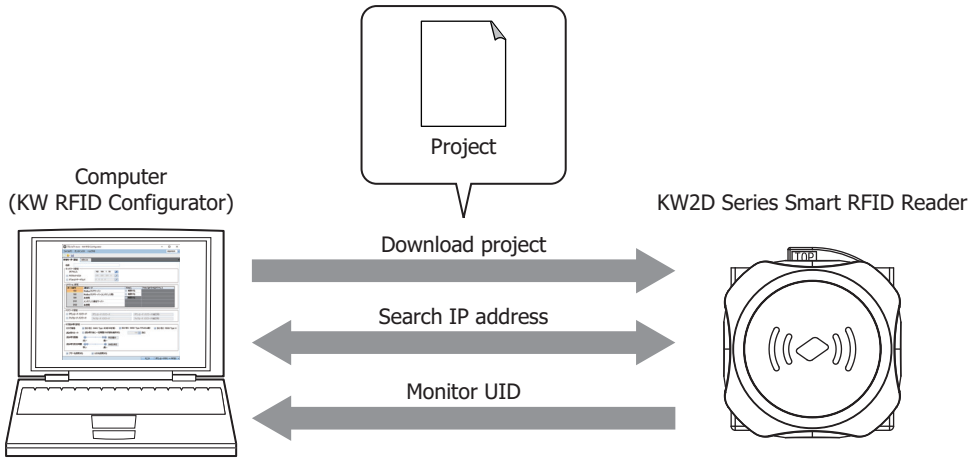

# Chapter 2 Product Specifications

This chapter describes the part names and specifications of the KW2D Series Smart RFID Reader and the KW2D special tag.

## 1 Specifications

Caution

Be careful when using card type KW2D special tags. These tags have a smaller temperature range than the KW2D Series Smart RFID Reader itself. If card type KW2D special tags are used outside the specified temperature range, there is a risk of deformation, damage, or malfunction.

### 1.1 KW2D Series Smart RFID Reader

● Environmental Specifications

| | | |
|---|---|---|
| **Ambient Operating Temperature** | -25 to +55°C (no freezing) | |
| **Ambient Storage Temperature** | -40 to +80°C (no freezing) | |
| **Ambient Operating Humidity** | 10 to 95% RH (no condensation) | |
| **Storage Humidity** | 10 to 95% RH (no condensation) | |
| **Pollution Degree** | Front of panel | 3 (IEC 60664-1) |
| | Inside panel | 2 (IEC 60664-1) |
| **Degree of Protection*1** | Front unit*2 | IP65 or IP67 (IEC 60529), IP67F(JIS C 0920)*3 |
| | Back unit | IP20 (IEC 60529) |
| **Corrosion Resistance** | No corrosive gas | |
| **Altitude or Air Pressure** | During use | 1013 to 795 hPa (0 to 2000 m) |
| | During transport | 1013 to 701 hPa (0 to 3000 m) |
| **Installation Location** | Indoors | |
| **Overvoltage Category** | II | |
| **Vibration Resistance** | 5 to 55Hz, half amplitude 0.5mm, each direction XYZ | |
| **Shock Resistance** | 100m/s2, 11ms, XYZ, 3 axes, 6 directions | |
| **EMC Immunity** | IEC/EN 61131-2 Zone B, EN 301-489-3 compatibility | |

*1 IP ratings are not applicable to UL certification.
*2 Front of panel only
*3 The protective structure of the operating part after this product is mounted on the panel. Although this poduct complies with various testing conditions, normal operation in all environments is not guaranteed. The oil-proof structure of IP67F complies with the oil-proof test conditions of Japanese Industrial Standards JIS C 0920 appendix. There is no guarantee for long-term use in an oil-filled environment or use of out of specification oil. Please check by testing in advance.

## ● Electrical Specifications

| | | |
|---|---|---|
| **Rated Input Voltage** | 24V DC | |
| **Voltage Fluctuation Range** | 20.4 to 28.8V DC | |
| **Current Draw** | 100mA maximum | |
| **Allowable Momentary Power Interruption** | 1ms or longer (at rated power supply voltage) | |
| **Withstand Voltage** | Between power and FE terminals | 500V AC, 1 minute |
| | Between LAN port and internal circuit | 500V AC, 1 minute |
| **Insulation Resistance** | Between power and FE terminals | 100 MΩ or higher (500V DC insulation resistance tester) |
| | Between LAN port and internal circuit | 100 MΩ or higher (500V DC insulation resistance tester) |
| **Inrush Current** | 25 A maximum | |
| **Isolation** | Between LAN port and internal circuit | Transformer isolation |
| **Ground** | D-type ground (Class 3 ground) | |
| **Functional Ground Wire** | Refer to Chapter 3 "4 Power Supply and Power Supply Wiring" on page 3-9. | |
| **Power Supply Wire** | Refer to Chapter 3 "4 Power Supply and Power Supply Wiring" on page 3-9. | |
| **Effect of Improper Power Supply Connection** | Reverse polarity | Normal operation |
| | Improper voltage or frequency | Permanent damage may be caused |
| | Improper lead connection | Permanent damage may be caused |
| **Weight (approx.)** | 70 g | |

## ● Mechanical Specifications

| | | |
|---|---|---|
| **Power Supply Terminals** | Terminal configuration | Push-in terminals |
| | Wire pull force | AWG24: 10N maximum<br>AWG22: 15N maximum<br>AWG20: 20N maximum<br>AWG18: 30N maximum<br>AWG16: 40N maximum |
| | Insertion/removal durability | 25 times minimum |
| | Recommended operation force of Pusher | 20 N (40 N maximum) |
| **Tag Holder*1** | Insertion/removal durability | 10,000 times minimum |
| **Indicators*2** | Three colors of LEDs (red: 2, green: 2, white: 4) | |
| **Buzzer*3** | Single tone with fixed volume | |
| **Case Materials** | Front cover, back cover | PBT |
| | Front base, back base | PA66 |
| | Lens | PCT |

*1 This holder is for mounting the KEYFOB type tag (KW9Z-T1X**).
*2 For details on the illumination conditions, refer to Chapter 5 "1 KW2D Series Smart RFID Reader Statuses and Operations" on page 5-1.
*3 For details on the buzzer operation conditions, refer to Chapter 5 "1 KW2D Series Smart RFID Reader Statuses and Operations" on page 5-1.

● Ethernet Communication Specifications

| | | |
|---|---|---|
| **Communication Type** | IEEE 802.3 compliant | |
| **Connector** | Connector | RJ-45 |
| | Pull force | 15 N |
| | Insertion/removal durability | 100 times minimum |
| **Isolation** | Pulse transformer isolated | |
| **Transmission Speed** | 10BASE-T and 100BASE-TX | |
| **Communication Functions** | Modbus TCP communication (server), EtherNet/IP communication (adapter), CC-Link IE Field Basic communication (slave station), Event Transmission (TCP, UDP), and maintenance communication (server) are supported. | |
| **Cable** | Category 5 or higher rated twisted pair cable with a maximum length of 100 m | |

● RFID Interface Specifications

| | | |
|---|---|---|
| **Communication Standards** | ISO/IEC14443 Type A, ISO/IEC 18092, JIS X6319-4, and ISO/IEC 15693 | |
| **Communication Speed** | ISO/IEC18092 (Felica) | 212 kbps |
| | ISO/IEC14443 TypeA | 106 kbps |
| | ISO/IEC 15693 | 26.5 kbps |
| **Radio Frequency** | 13.56 MHz (HF band) | |
| **Supported Tags*1** | KEYFOB type | ISO/IEC 14443 Type A |
| | Card type | ISO/IEC 14443 Type A, ISO/IEC18092 (FeliCa), ISO/IEC15693 |
| **Tag Reading Distance*2** | KEYFOB type | 0 to 5 mm |
| | Card type | 0 to 15 mm |
| **Tag Reading Time*3** | 300 to 3000 ms | |

- The listed value is that in an ideal environment that is not affected by radio waves and metals in the surrounding area. Carefully check the performance of this product in your environment.
- For installation, refer to Chapter 3 "1 Installation and Wiring Precautions" on page 3-1.

*1 Multiple tags cannot be read.
*2 The tag reading distance is a value that was measured using the tags listed in "LSI list of Operation-confirmed tags" on page 2-4 that IDEC has tested. In addition, the reading distance is measured with the tag stationary in the center of the front unit. The tag reading position changes depending on the tag to be used, the tag position and the operating environment.
*3 Configures the **Reading Time** under the **Tag Read Settings** on the **RFID Reader Settings** tab of KW RFID Configurator. For details, refer to Chapter 6 "Reading Time" on page 6-12.

## 1.2 KW2D Special Tag

● Environmental Specifications

| | | |
|---|---|---|
| **Ambient Operating Temperature** | KEYFOB type | -25 to +55°C (no freezing) |
| | Card type | 0 to +50°C (no freezing) |
| **Ambient Storage Temperature** | KEYFOB type | -25 to +75°C (no freezing) |
| | Card type | -20 to +50°C (no freezing) |
| **Ambient Operating Humidity** | KEYFOB type | 60% RH or less (no condensation) |
| | Card type | 20 to 90% RH (no condensation) |
| **Storage Humidity** | KEYFOB type | 60% RH or less (no condensation) |
| | Card type | 90% RH or less (no condensation) |
| **Reading Distance*1** | KEYFOB type | 0 to 5 mm |
| | Card type | 0 to 10 mm |
| **Operating Environment** | Indoors | |

● LSI list of Operation-confirmed tags

| IC Tag Standard | Manufacturer Name | Tag Type | |
|---|---|---|---|
| | | KEYFOB | Card |
| ISO/IEC14443 Type A | MIFARE CLASSIC 1K (NXP) | - | Yes |
| | MIFARE UL EV1 (NXP) | - | Yes |
| ISO/IEC15693 | ICODE SLI (NXP) | - | Yes |
| | ICODE SLIX (NXP) | - | Yes |
| | Tag-it HF-I Plus (TI) | - | Yes |
| | Tag-it HF-I Pro (TI) | - | Yes |
| | my-d SRF55V10P (Infineon) | - | Yes |
| | my-d SRF55V02P (Infineon) | - | Yes |
| | MB89R118B (Fujitsu) | - | Yes |
| | MB89R118C (Fujitsu) | - | Yes |
| ISO/IEC18092(FeliCa) | RC-S962 (Standard) (Sony) | - | Yes |
| | RC-S965 (Lite) (Sony) | - | Yes |
| | RC-S966 (Lite-S) (Sony) | - | Yes |

*1 The tag reading distance is a value measured with the tag center stationary at the center of the front unit. It depends on the actual usage environment.

# 2 Part Names and Functions

The main unit of the KW2D Series Smart RFID Reader consists of the front unit (1) and the back unit (6).

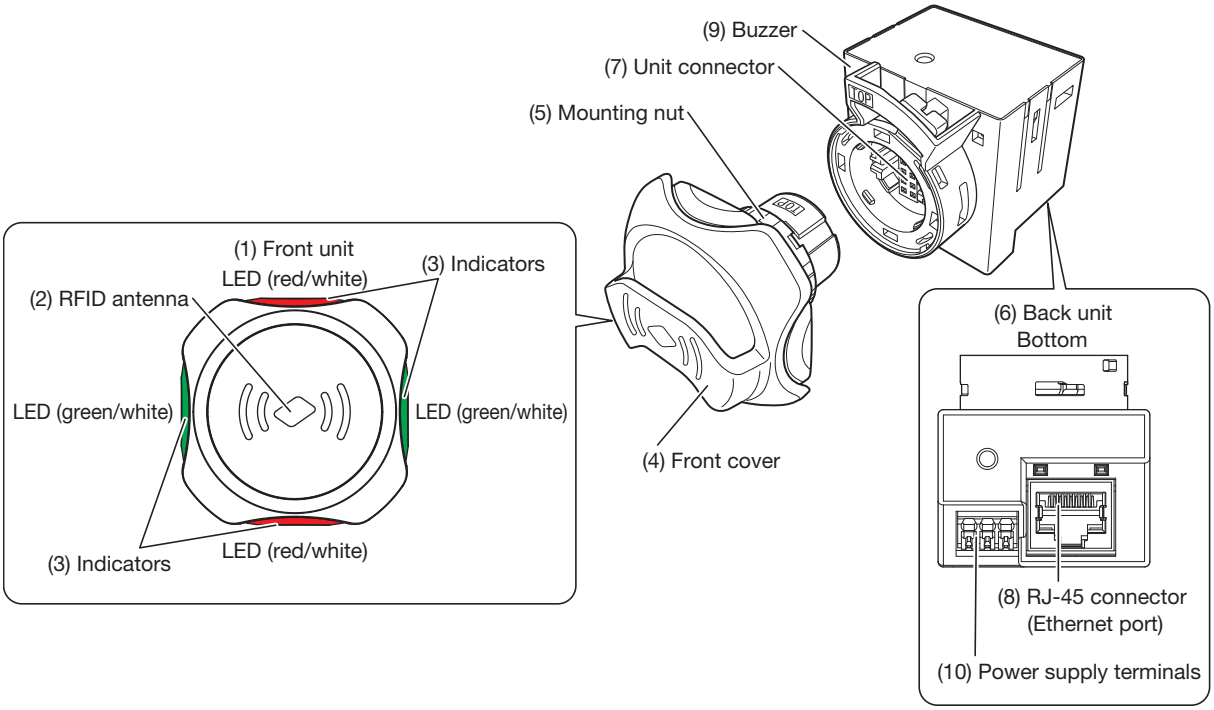


**(1) Front unit**

This unit is mounted on the front surface of the panel. The RFID antenna (2) and indicators (3) are built into this unit.

**(2) RFID antenna**

The antenna used to communicate with RFID tags.

**(3) Indicators**

Built into the front unit. The indicators turn on and off when the KW2D Series Smart RFID Reader is operating.
For details on the LED illumination conditions, refer to Chapter 5 "1 KW2D Series Smart RFID Reader Statuses and Operations" on page 5-1.

| LED | Description |
|---|---|
| LED (red) | When there is an error in reading and verification of the UID, or when there is no host communication, this LED lights up and flashes. Only while monitoring the KW RFID Configurator, this LED does not flash even when there is no host communication. |
| LED (white) | It flashes slowly (interval of 1 sec) during operation and it flashes quickly (interval of 100 ms) when reading an RFID tag. |
| LED (green) | When the reading and verification of the UID is normal, and the communication of the master station is normal, this LED lights up and flashes. |

**(4) Front cover**

There are two types: standard type (KW9Z-CV) and holder type (KW9Z-CVH). The holder type has the cover to attach the KEYFOB type tag (KW9Z-T1X **).

**(5) Mounting nut**

Fixes the front unit to the mounting panel.

**(6) Back unit**

The unit stored inside the panel. The RFID reading circuit, Ethernet interface circuit, power supply interface circuit, buzzer, and other components are built into this unit.

**(7) Unit connector**

This connector is used to connect the front unit and back unit.

**(8) RJ-45 connector (Ethernet port)**

Connect a LAN cable and this port allows Ethernet communication with connected devices that are equipped with an Ethernet interface.

| LED | Status |
|---|---|
| Steady yellow | A host device or network device is being connected to the RJ-45 connector. |
| Flashing green | The KW2D Series Smart RFID Reader is sending or receiving data |

**(9) Buzzer**

Notifies the user of the result of reading and verifying a UID. For details, refer to Chapter 5 "1 KW2D Series Smart RFID Reader Statuses and Operations" on page 5-1.

**(10) Power supply terminals**

These terminals are used to supply DC power (24V DC) to the KW2D Series Smart RFID Reader.

For details on the KW2D Series Smart RFID Reader installation, refer to Chapter 3 "Installation and Wiring" on page 3-1.

# 3 Dimensions

## 3.1 Main unit

● Standard type: KW2D-R100Q4E

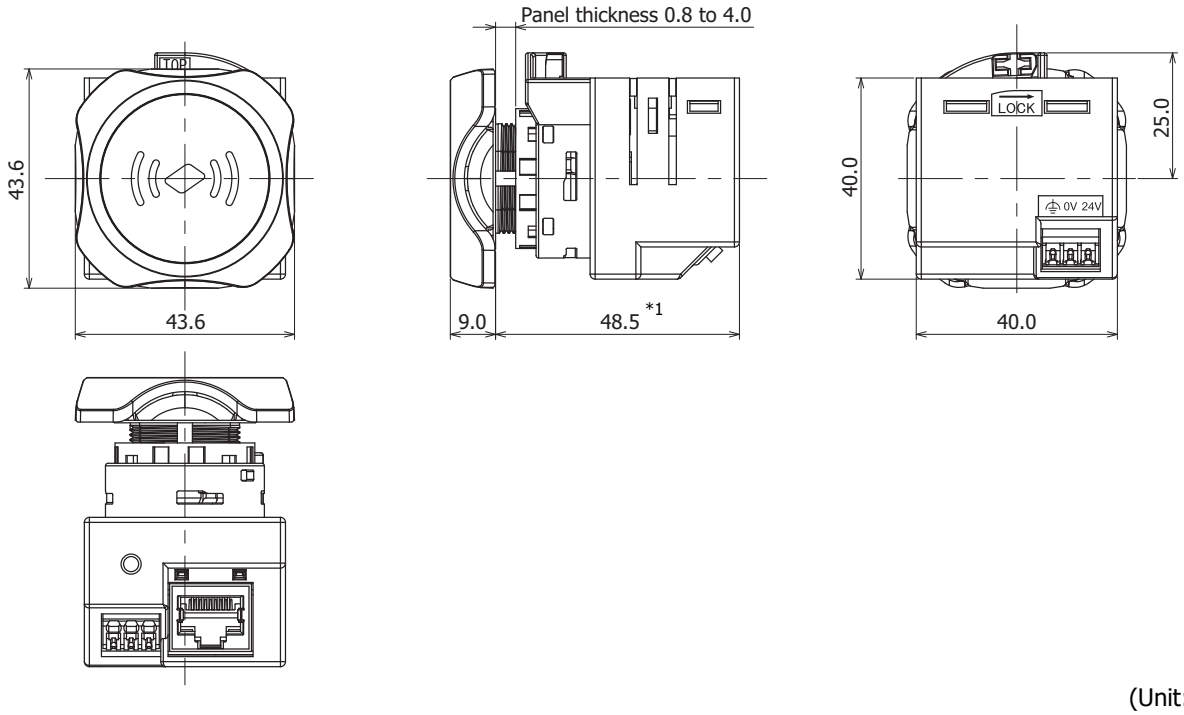


(Unit: mm)

● Holder type: KW2D-RH100Q4E

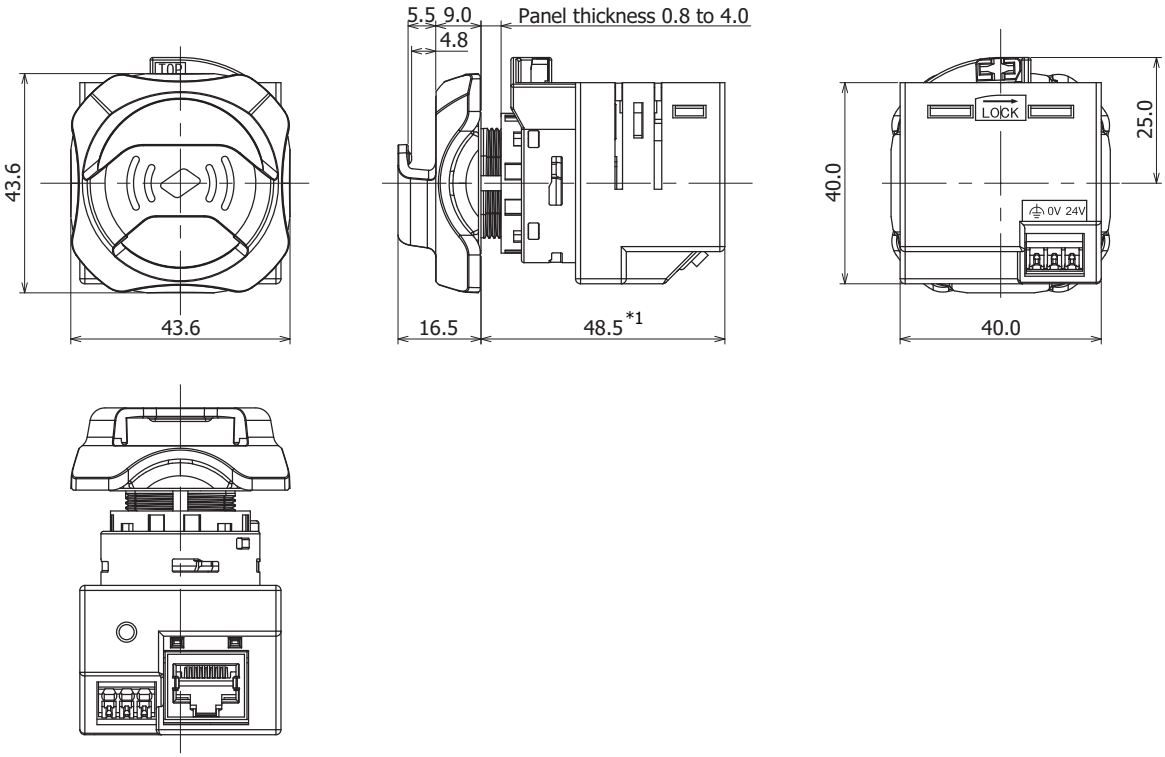


(Unit: mm)

*1 The height is the length to the front of the mounting panel.

## 3.2 RFID tags

● KEYFOB type: KW9Z-T1X1G, KW9Z-T1X2Y, KW9Z-T1X3R, KW9Z-T1X4S, and KW9Z-T1X5B

Dimensions when KEYFOB type tag is inserted

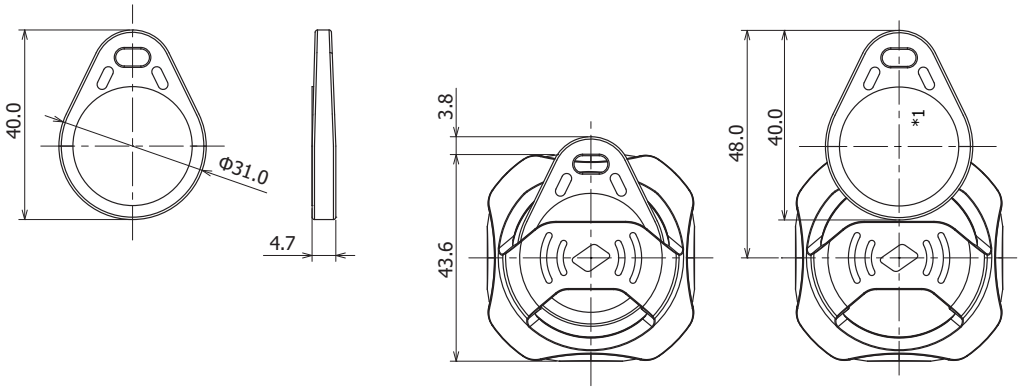


(Unit: mm)

● Card type: KW9Z-T2X0

Dimensions when reading

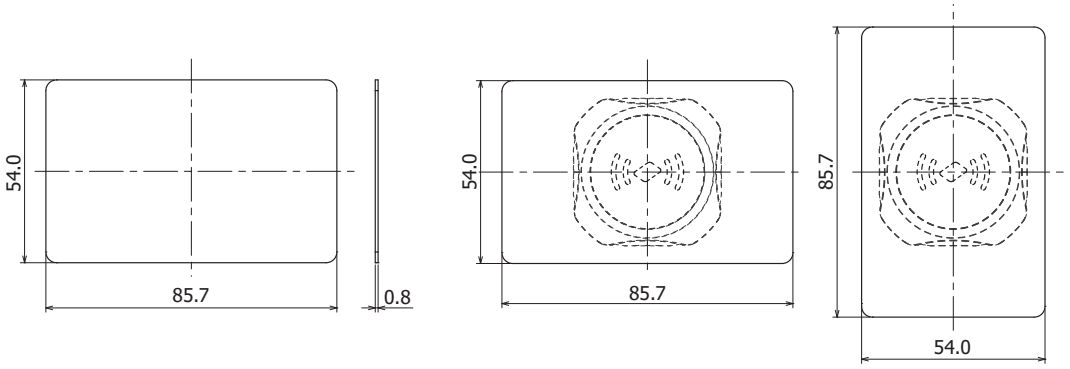


(Unit: mm)

## 3.3 Front cover

● Standard type: KW9Z-CV

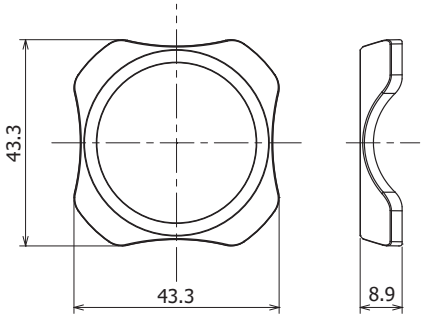


(Unit: mm)

● Holder type: KW9Z-CVH

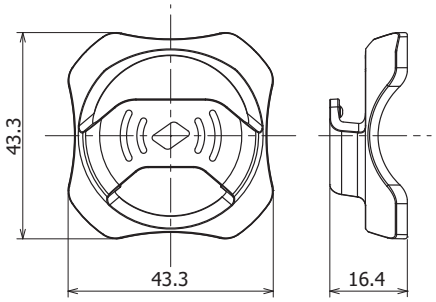


(Unit: mm)

*1 Minimum size with KEYFOB type is attached

# Chapter 3 Installation and Wiring

This chapter describes how to install and wire the KW2D Series Smart RFID Reader.
Carefully read and understand the content in this manual to correctly use the KW2D Series Smart RFID Reader.

## 1 Installation and Wiring Precautions

Warning Turn off the power to the KW2D Series before installation, removal, wiring, maintenance, and inspection of the KW2D Series. Failure to turn power off may cause damage, electrical shocks or fire hazard.

### 1.1 Installation Space

Metal around the front unit will affect the reading distance of RFID tags. If the front unit is surrounded with metal, separate the metal from the front unit by 20 mm or more.

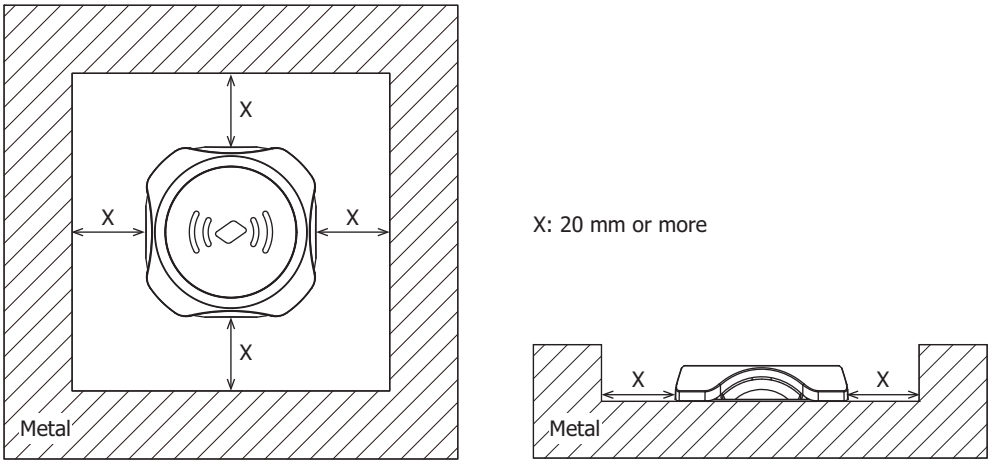


**When Multiple Tags Are in the Reading Area**

The wrong tag may be detected. Keep tags that should not be read 150 mm or more from the area around the front unit.

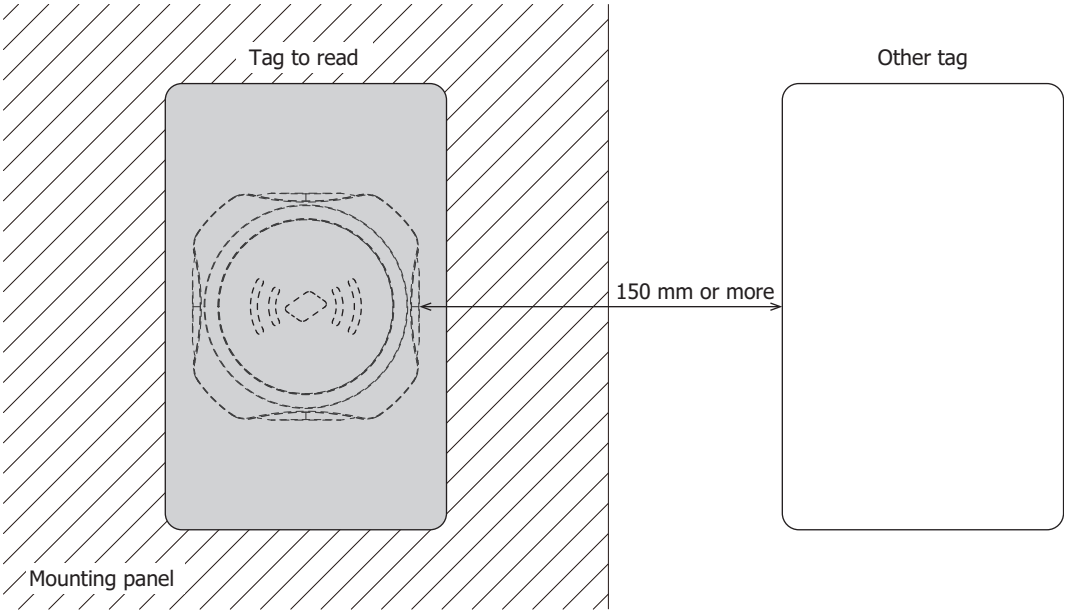

# 2 How to install and remove

## 2.1 Back unit

● How to remove

1 While pressing the locking lever (1) on the back unit, push it in the opposite direction indicated by "LOCK→" (2).

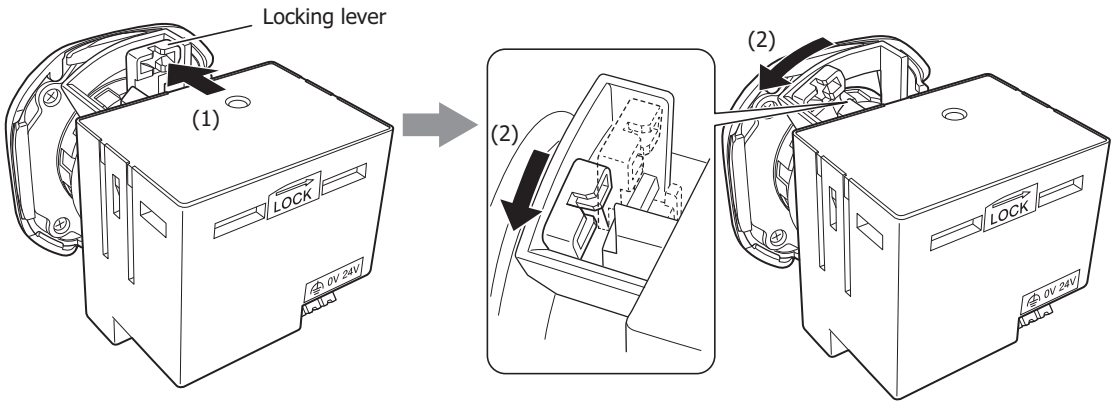


2 Remove the back unit from the front unit.

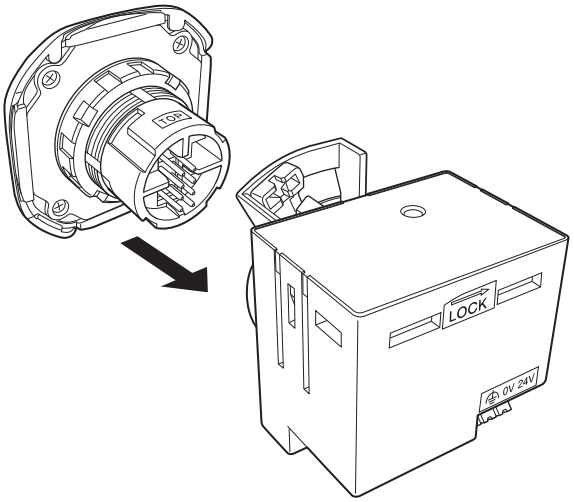


This completes the removal of the back unit from the front unit.

● How to install

1 Align the TOP marks on the front unit and the back unit, and then insert the back unit into the front unit.

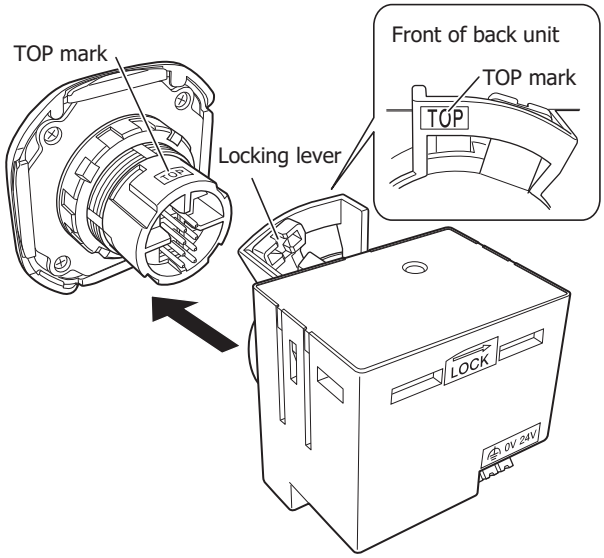


Caution You cannot insert the back unit into the front unit if the locking lever is in the locked position ("LOCK→"). Always confirm that the locking lever is in the unlocked position (opposite direction of "LOCK→").

2 Confirm that the back unit is inserted fully into the front unit, and then while pressing the locking lever (1) on the back unit, push it in the direction indicated by "LOCK→" (2).

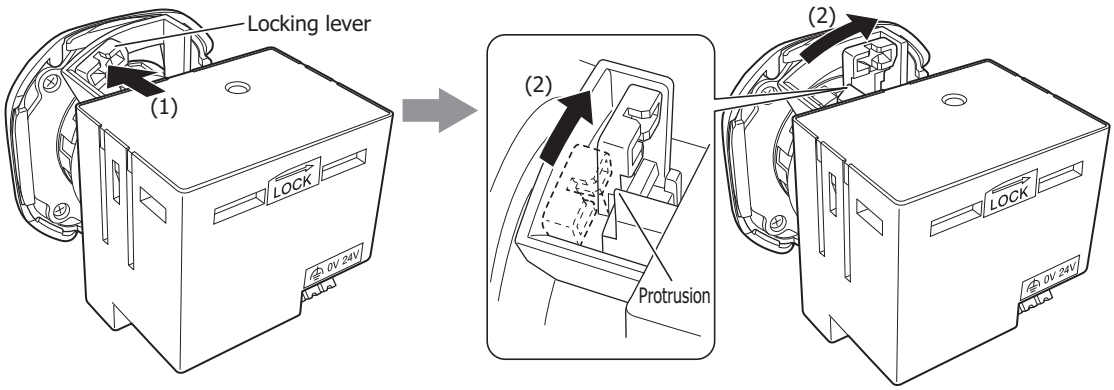


Caution
- Confirm that the locking lever is on the other side of the protrusion. The lock is not fully engaged if the locking lever is not in the lock position ("LOCk→") on the other side of the protrusion.
- After attaching , confirm that the back unit does not come off.

This completes attaching the back unit to the front unit.

## 2.2 Front cover

The front cover is fixed to the front unit with hook section A and hook section B on the backside of the front unit. Hook section A is found in two locations and hook section B is also found in two locations.

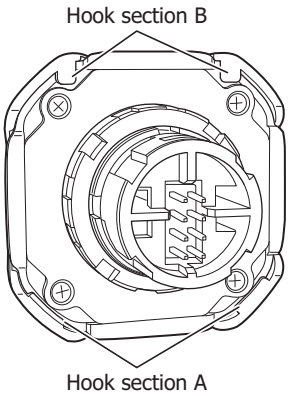


● How to remove

1 Separate the front unit and back unit. (☞"How to remove" on page 3-2)

2 Press a flat blade screwdriver with a thin tip near hook section A in two locations and remove the front cover (hook section A).

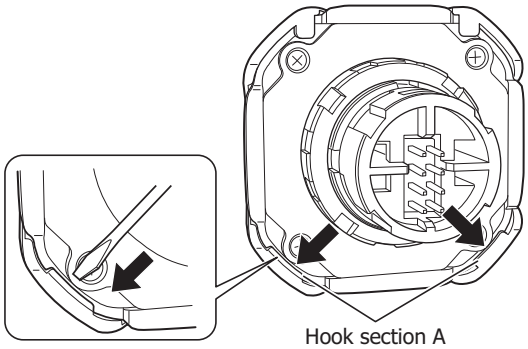


3 Slide the front cover up (in the direction of the arrow) and release hook section B.

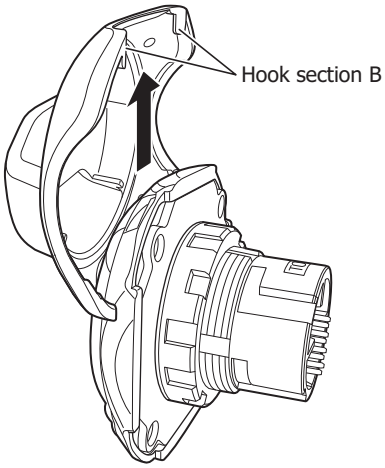


This completes the removal of the front cover from the front unit.

● How to install

Attach hook section B of the front cover to the front unit (1), and then push hook section A onto the front unit (2).

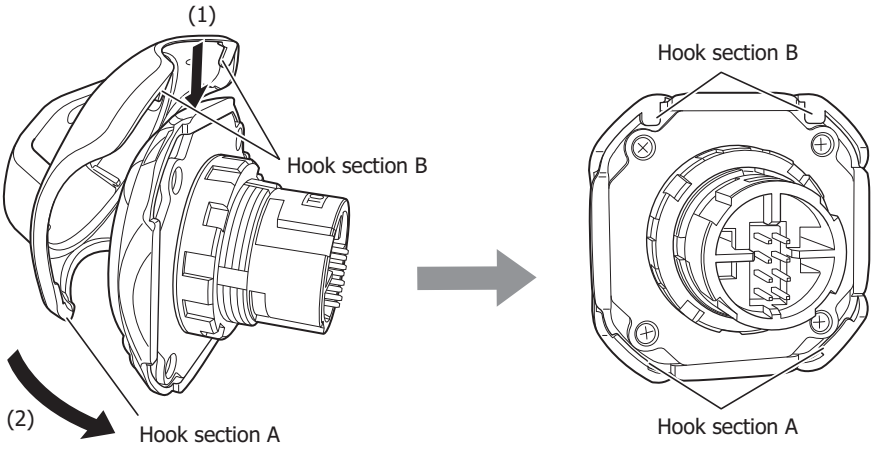


This completes attaching the front cover to the front unit.

Caution
- Confirm that hook section A and hook section B are firmly attached to the front unit.
- After attaching the front cover to the front unit, confirm that the front cover does not come off.

The front cover can be attached with a pitch of 90°.

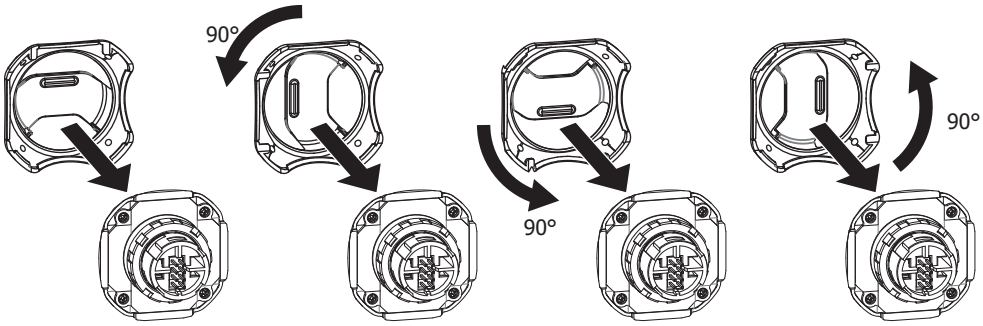


The front cover is attached in this direction when shipped from the factory.

## 2.3 How to mount to a panel

1. Remove the back unit from the front unit. (☞"How to remove" on page 3-2)
2. Turn the locking ring counterclockwise and remove it from the front unit.

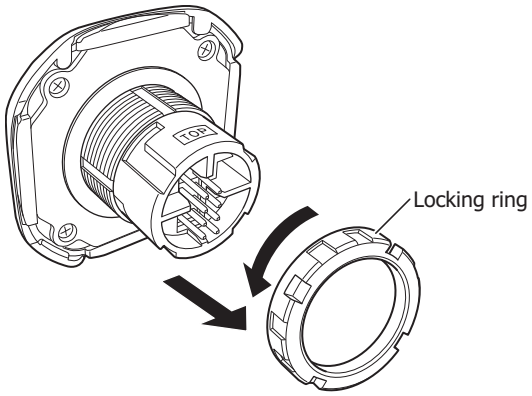


3. Insert the front unit into the mounting hole from the front of the panel (1), and then turn the locking ring clockwise to the install the locking ring from the back of the panel (2).

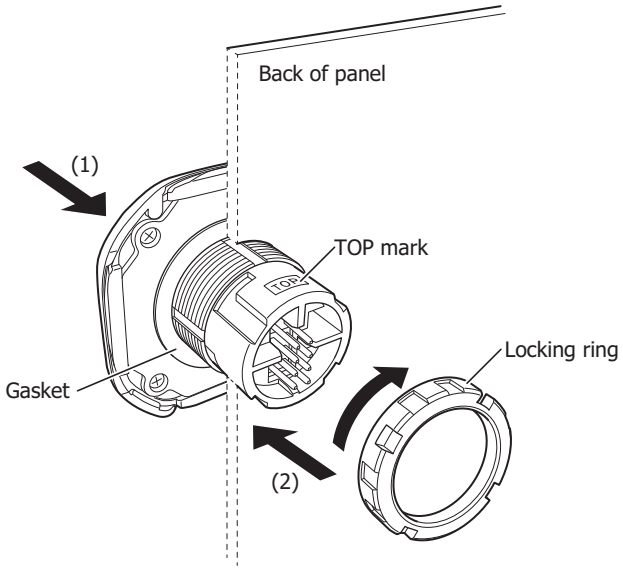


4. Use the locking ring wrench to tighten the locking ring to the specified tightening torque (2.0 N·m).

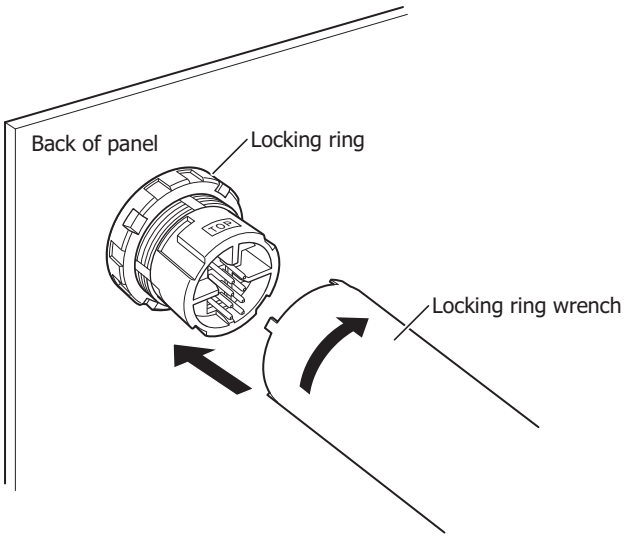

**5** Align the TOP marks on the back unit and the front unit, and then insert the back unit into the front unit.

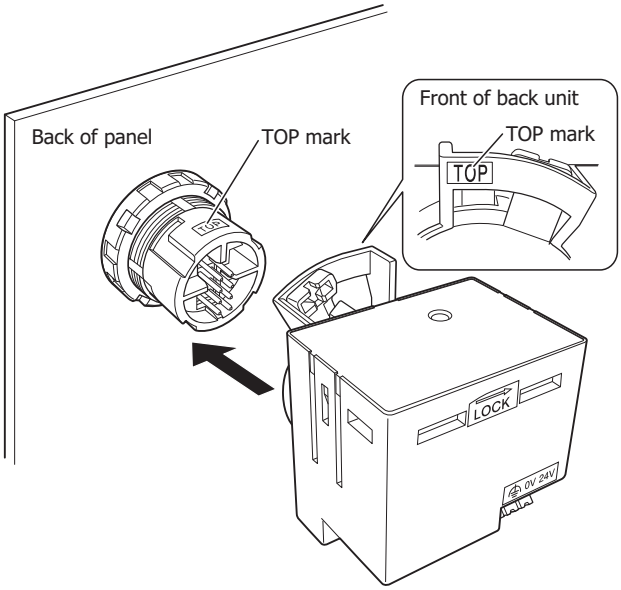


> **Caution** You cannot insert the back unit into the front unit if the locking lever is in the lock position ("LOCk→"). Always confirm that the locking lever is in the unlocked position (opposite direction of "LOCK→").

**6** Confirm that the back unit is inserted fully into the front unit, and then while pressing the locking lever (1) on the back unit, push it in the direction indicated by "LOCK→" (2).

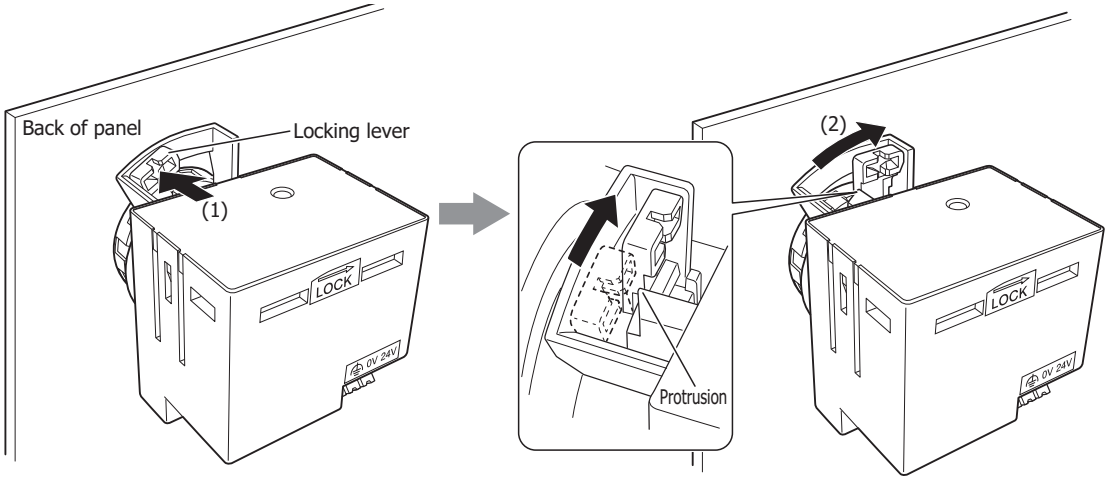


> **Caution**
> - Confirm that the locking lever is on the other side of the protrusion. The lock is not fully engaged if the locking lever is not in the lock position ("LOCk→") on the other side of the protrusion.
> - After attaching the back unit to the front unit, confirm that the back unit does not come off.

This completes mounting the KW2D Series Smart RFID Reader to the panel.

> **Caution**
> - Tighten the locking ring to the specified tightening torque of 2.0 N·m.
> - The locking ring may break if needle-nose pliers or another tool are used to tighten the locking ring or the l is tightened to more than the required torque. Use the locking ring wrench (Type No.: MW9Z-T1) manufactured by IDEC.
> - After attaching the back unit to the front unit, confirm that the back unit does not come off.

> The KW2D Series Smart RFID Reader can be mounted to metal panels (such as steel and aluminum) and resin panels (such as plastic).

# 3 Drilling the Mounting Hole

## 3.1 Mounting Hole Layout

Drill a mounting hole in the panel with the dimensions shown in one of the following diagrams.

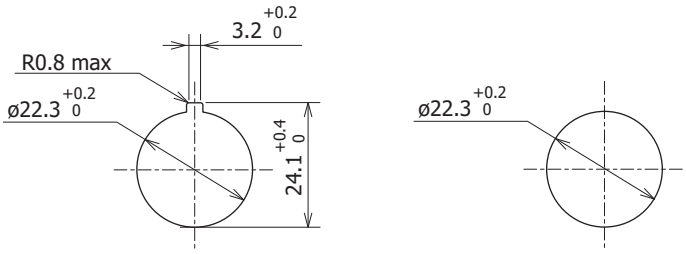


(Unit: mm)

## 3.2 Installation example

Caution

- The numeric values given in the following diagram are a guide for the restrictions on wiring in the panel. These numeric values will change depending on the cables that are used.
  Use centers that take into consideration the usability of tags (KEYFOB type and card type) and other obstructions.
- If multiple KW2D Series Smart RFID Readers are installed close together, the radio waves will interfere and tags cannot be read. Ensure a space of 150 mm or more between the centers of neighboring front units.

When mounting the KW2D Series Smart RFID Reader and IDEC push buttons on the same panel, the minimum pitch differs depending on the mounting position and cable.

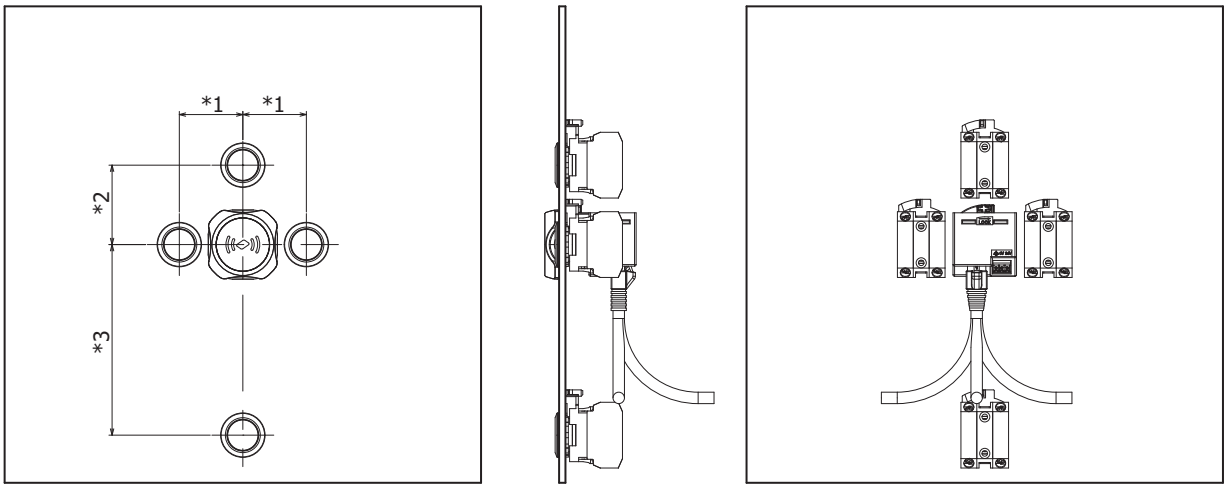


| | Mounting Position | Cable | CW Series | LW Series | LBW Series |
|---|---|---|---|---|---|
| *1 | Left/Right | Not use | 40 | 38 | 36 |
| *2 | Top | Not use | 50 | 41 | 39 |
| *3 | Bottom | Use | 120 | 115 | 115 |

(Unit: mm)

# 4 Power Supply and Power Supply Wiring

## 4.1 Power Supply

Warning: Turn off the power to the KW2D Series before installation, removal, wiring, maintenance, and inspection of the KW2D Series. Failure to turn power off may cause damage, electrical shocks or fire hazard.

Caution:
- Use SELV power supply that is reinforced or double-insulated from MAINS without any risk of electric shock, and Limited Energy (LIM) Circuit.
- Keep all wiring a sufficient distance away from high voltage and high current cables. Make wiring as short as possible.
- Carefully observe the precautions when wiring the product.
- Ground the functional ground terminal for stable operation of the product.

## 4.2 Power Supply Voltage

The power supply voltage that can be used with the KW2D Series Smart RFID Reader is 20.4 to 28.8 V DC.

Caution: Use SELV power supply that is reinforced or double-insulated from MAINS without any risk of electric shock, and Limited Energy (LIM) Circuit.

## 4.3 Power Supply Terminal Wiring

- The KW2D Series Smart RFID Reader has a push-in type terminal block.
- An inrush current of 25 A or lower (when input is +24 V) flows when the power is turned on. Use a power supply with sufficient capacity.
- Make the power line as short as possible.
- Run the power line as far away as possible from motor lines.
- The following table shows the signals that correspond to the signal codes. Please wire correctly.

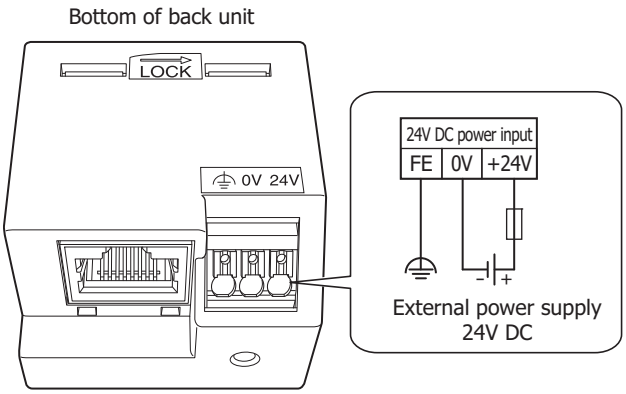


| Terminal symbol | Signal content |
|---|---|
| ⏚ | Functional ground (FE) |
| 0 V | Power supply (0 V) |
| 24 V | Power supply (+24 V) |

## 4.4 Power Supply Terminal Block Wiring Method

Warning Turn off the power before wiring.

● How to attach the wire

Warning
- Crimping dimensions of the terminal hole side (Maximum connectable crimping size) is W2.1 x H1.48mm. Recommended crimping tool, refer to "5.3 Recommended Tools" on page 3-15.
- Connect the ferrules to the terminal block so that the long side is horizontal as shown in the figure below.

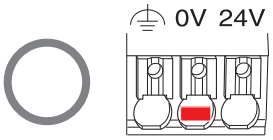


Do not insert the ferrules in the vertical direction as shown in the figure below. The clamp and spring may break and no longer function.

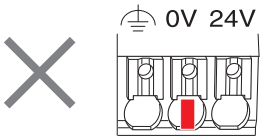


■ **Stranded wires with ferrules or solid wire**

1. Insert the wire straight to the back of the wire port, and then the wire will be connected.
2. After wiring, pull the wires lightly to make sure that the wire is properly connected.

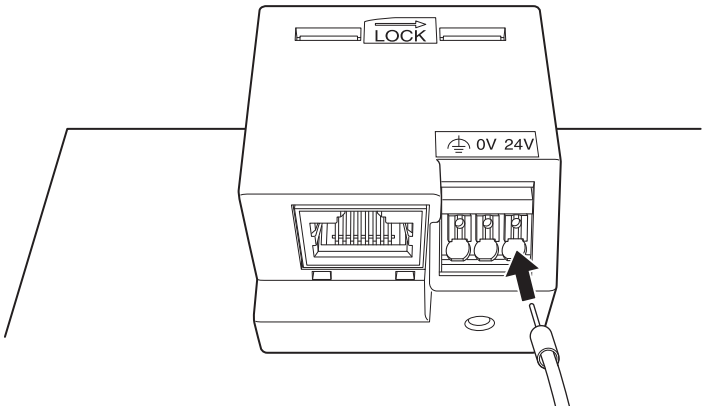

### Stranded wire

Caution Operate the pusher with about 20 N of force. The product may break and no longer function if you press with Caution excessive force.

1. While pressing the pusher (white button) using a flat blade screwdriver. Insert the wire fully in the wiring port. Wire is connected when the pusher is released.
2. After wiring, tug lightly to make sure that the wire is properly connected.

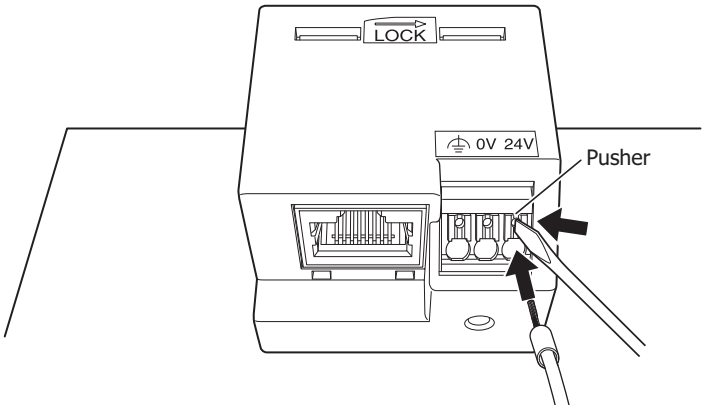


● How to remove the wire

Press the pusher with a flat blade screwdriver and pull the wire straight out.

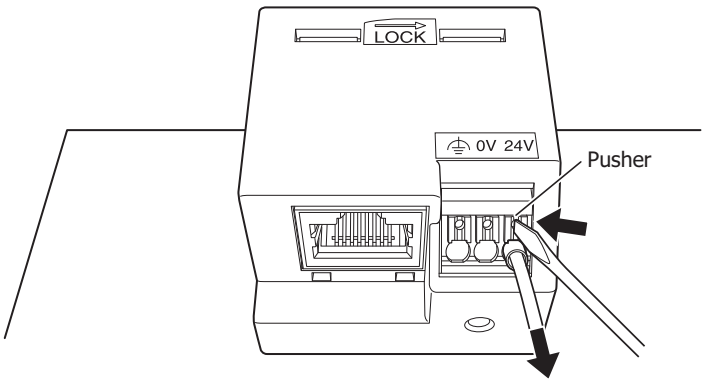


Caution
- Operate the pusher with about 20 N of force. The product may break and no longer function if you press with excessive force.
- The product may be damaged and no longer function if you pull out the wire without pressing the pusher or if you pull the wire at an angle.

# 5 Terminals

## 5.1 Terminals for the Terminal Block

- Choose an appropriate ferrule for the wire. For details, refer to "Wire Size and Recommended Ferrules" on page 3-14.
- Cut the wire carefully to get a flat end.
- Make sure that ferrule sleeve is completely filled by the conductor. Depending on the cross section, the conductor should protrude approx. 0 to 1 mm from the ferrule sleeve.

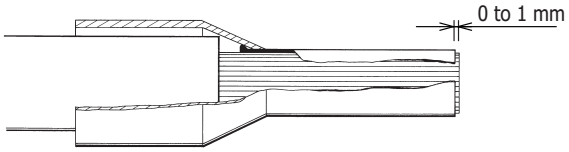


- When crimping, refer to the instructions of the crimping tool.
- Make sure that the finished size of the terminal after crimping is smaller than W2.1 x H1.48 mm. (Recommended crimping tool, refer to "5.3 Recommended Tools" on page 3-15).

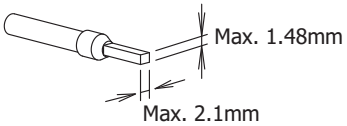


Caution

- If a tool other than the recommended crimping tool is used, the ferrule may not be crimped to the appropriate size and the Power supply terminals may be deformed and may not operate normally.
- Pin crimp terminals cannot be used.

● Precautions When Crimping Wires

Please be careful not to cause the following problems when crimping wires.

- Cracks along the sides and die impressions
- Splitting of the ferrules
- Asymmetrical crimping shape
- Extreme burrs formed along the sides
- Ferrule not filled by conductor
- Single conductors pushed back by protruding from the insulated cover
- Single conductor squeezed off
- Insulation cover damaged by the crimping jaw
- Conductor insulation not pushed into the insulated cover
- Ferrule bent longitudinally after crimping

**Cracks are formed along the sides**

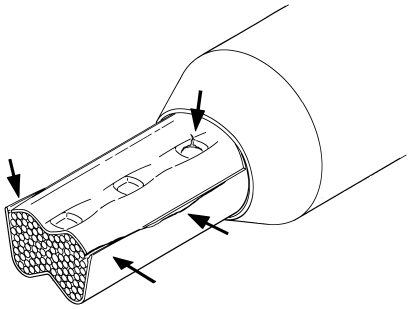

**Cracks are formed after crimping**

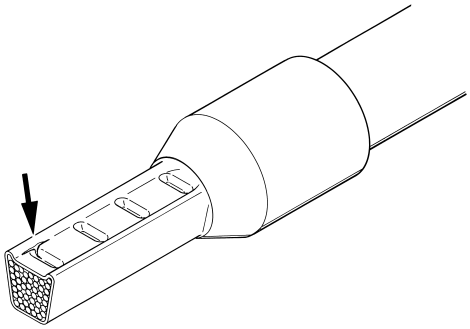

**Asymmetrical crimping shape.**
**Burr formation on one side.**

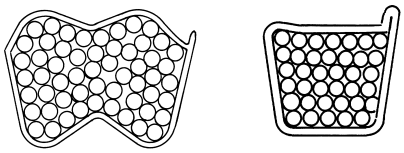

**Single conductor squeezed off.**

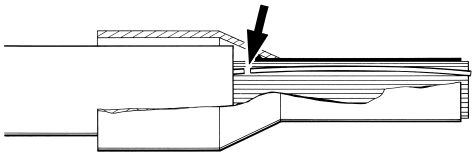

**Single conductor pushed back.**

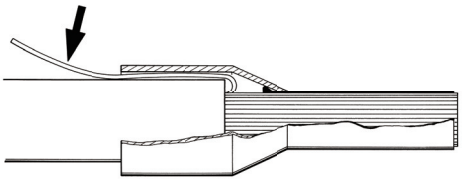

## 5.2 Applicable Wire

When wiring, use the applicable wires shown below.
To crimp the ferrules shown below, use a special crimping tool.
To the terminal block, use the recommended screwdriver.

● Applicable Wire and Specifications

| | |
|---|---|
| **Applicable Wire** | 0.25 to 1.5 $mm^2$ (AWG16 to 24) |
| **Wire Strip Length** *1 | 8±1 mm *2 |
| **Ferrule Size** *1 | H0.5 to H1.5 (without insulated cover) |
| | H0.25 to H0.75 (with insulated cover) |

Caution Make sure that the stranded wires do not loosen when using wiring without ferrules.

● Wire Size and Recommended Ferrules

■ **Ferrules without Insulated Covers**

| Applicable Wire (Stranded Wire) | | Wire Strip Length | Model Number (Order Number) | Manufacturer |
|---|---|---|---|---|
| AWG | $mm^2$ | | | |
| 20 | 0.50 | 10 to 11 mm | H0.5/10 (9004050000) | Weidmüller |
| 18 | 0.75 | 10 to 11 mm | H0.75/10 (0542500000) | Weidmüller |
| 17 | 1.00 | 10 to 11 mm | H1.0/10 (0282800000) | Weidmüller |
| 16 | 1.50 | 10 to 11 mm | H1.5/10 (0186500000) | Weidmüller |

■ **Ferrules with Insulated Covers**

| Applicable Wire (Stranded Wire) | | Wire Strip Length | Model Number (Order Number) | Manufacturer |
|---|---|---|---|---|
| AWG | $mm^2$ | | | |
| 24 | 0.25 | 10 to 11 mm | ST3L-H025-12WJ | IDEC |
| | | | H0.25/12 HBL (9025760000) | Weidmüller |
| 22 | 0.34 | 10 to 11 mm | S3TL-H034-12WT | IDEC |
| | | | H0.34/12 TK (9025770000) | Weidmüller |
| 20 | 0.50 | 10 to 11 mm | S3TL-H05-14WA | IDEC |
| | | | H0.5/14 OR (0690700000) | Weidmüller |
| | | | H0.5/14S OR (9004560000)*3 | Weidmüller |
| | | | H0.5/14S W (9004590000)*3 | Weidmüller |
| 18 | 0.75 | 10 to 11 mm | S3TL-H075-14WW | IDEC |
| | | | H0.75/14 W (0462900000) | Weidmüller |

*1 For details on ferrules, refer to "Ferrules with Insulated Covers".
*2 Strip the sheath of the wire 8±1 mm from the end.

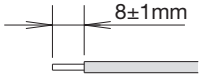


*3 UL wire compatible with insulated cover

## 5.3 Recommended Tools

| Tool Name | | Model Number (Order Number) | Manufacturer |
|---|---|---|---|
| Flat blade screwdriver | Normal type | SDS 0.4×2.5×75 (9009030000) | Weidmüller |
| | With insulated cover | S3TL-D04-25-75 | IDEC |
| | | SDIS 0.4×2.5×75 (9008370000) | Weidmüller |
| Crimping tool | | S3TL-CR06D | IDEC |
| | | PZ6/5 (90011460000) | Weidmüller |
| Stripping tool | | S3TL-ST06 | IDEC |
| | | STRIPAX(9005000000) | Weidmüller |

Caution

- Do not touch live terminals. There is a risk of electric shock.
- Do not touch the power supply terminals immediately after turning the power off. There is a risk of electric shock.
- When powered, the terminals that are connected to external devices may become hot. Do not touch the terminals immediately after turning the power off.
- Insert the wire all the way to the tip of the ferrule and crimp it.
- Only one wire can be inserted in one connector hole. Do not attach two or more wires to one connector hole.
- If you use a tool other than the recommended tools, the wire cannot be crimped into the appropriate shape. This may deform Power supply terminals and cause the product to no longer function correctly. Also, be careful regarding the dimensions of the crimp. For details on the dimensions, refer to "5.1 Terminals for the Terminal Block" on page 3-12.
- Use a flat blade screwdriver with a tip 2.5 mm wide and 0.4 mm high.

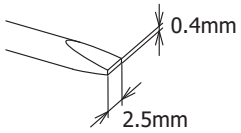

# 6 Wiring Directions and Panel Indicators

The position of the LED indicators (green and red) on the front unit changes according to the wiring direction.

## Standard type

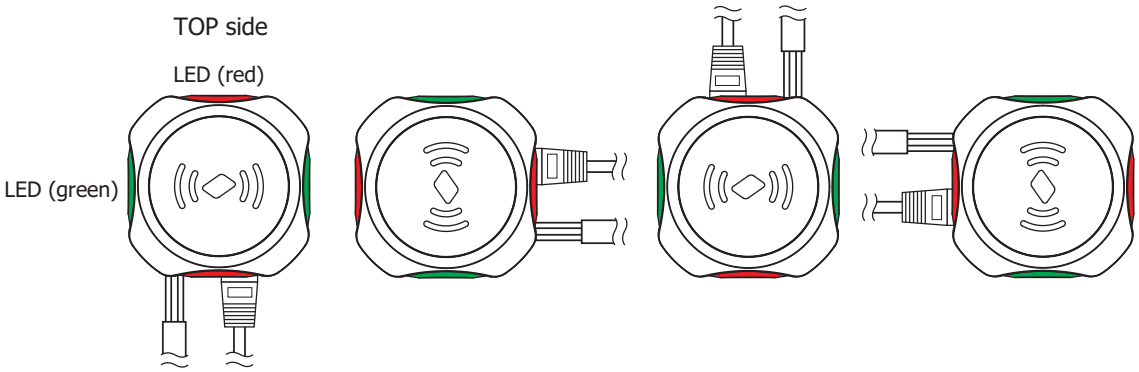


## Holder type

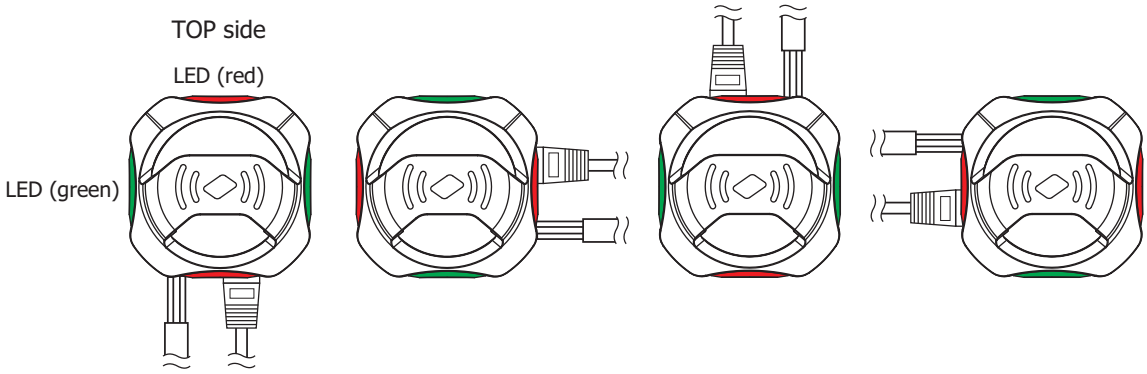


**Caution**

Attach the front cover according to the wiring direction.
When changing the direction of the wiring, change the front cover so the KEYFOB tag can be inserted from the top. For details on attaching the front cover, refer to "2.2 Front cover" on page 3-4.

# Chapter 4 Communication Function

This chapter describes the communication function between the KW2D Smart RFID Reader and the host device or KW RFID Configurator.

## 1 Modbus TCP Communication (Server)

### 1.1 Communication Specifications

| Item | Specifications |
|---|---|
| Supported protocol | Modbus TCP Server |
| Maximum number of simultaneous clients | 1 client per port |
| Port No. | 502, 503, and 504 |
| Unit ID (station number) | Unused (If a station number must be specified on the Modbus TCP client side, specify 1.) |
| Access control | 1 IP address can be specified per port. (Set in KW RFID Configurator) |
| Supported function codes | 01: Read the value of coil relay (000001 to 000016)<br>02: Read the value of input relay (100001 to 100032)<br>03: Read the value of holding register (400001 to 400032)<br>04: Read the value of input register (300001 to 300032)<br>05: Write a value to a coil relay (000001 to 000016)<br>06: Write a value to a holding register (400001 to 400032)<br>15: Write values to multiple coil relays (000001 to 000016)<br>16: Write values to multiple holding registers (400001 to 400032) |
| Function | • Read tag information<br>• Read status information<br>• Control LEDs and buzzer |

### 1.2 Communication data format

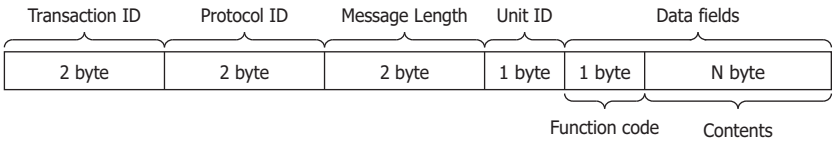


- **Transaction ID**
  The Modbus TCP Server returns the transaction ID from the client as is. The client can see which transaction the server is responding to. Set it to 0 if you do not want to check.
- **Protocol ID**
  The Modbus TCP protocol is identified by the value 0.
- **Message Length**
  Indicates the size of the Unit ID and data fields in bytes.
- **Unit ID**
  An ID for identifying the device. Stores the slave number of the Modbus TCP Server. The Modbus TCP Server of the KW2D Smart RFID Reader accepts and processes requests regardless of the Unit ID of the received request.

## Data fields

### Function code

The number indicating the function.

| Function code | Description |
|---|---|
| 01(01h) | Read the value of coil relay (000001 to 000016) |
| 02(02h) | Read the value of input relay (100001 to 100032) |
| 03(03h) | Read the value of holding register (400001 to 400032) |
| 04(04h) | Read the value of input register (300001 to 300032) |
| 05(05h) | Write a value to a coil relay (000001 to 000016) |
| 06(06h) | Write a value to a holding register (400001 to 400032) |
| 15(0Fh) | Write values to multiple coil relays (000001 to 000016) |
| 16(10h) | Write values to multiple holding registers (400001 to 400032) |

In the case of an NG response, the value obtained by adding 80h to the function code is stored.

### Contents

This is the data required for the processing specified by the function code.

● Communication format of Data fields

Read the value of the coil relay or input relay

The host device (Modbus TCP client) reads the value of the coil relay or input relay of the KW2D Smart RFID Reader (Modbus TCP Server). The number of continuous read bits is 1 to 32 bits. The function code is "01h" for the coil relay and "02h" for the input relay. In case of error, the function code is "81h" (01h + 80h) for the coil relay and "82h" (02h + 80h) for the input relay.

**Example: Read 32-bit (4 bytes) of data from input relay 0001.**

Request

| Function code | Start address number | | Number of bits of data to read | |
|---|---|---|---|---|
| 02h | 00h | 00h | 00h | 20h |
| (1 byte) | (2 bytes) | | (2 bytes) | |

**Input relays 0001 to 0016 are "1234h" and input relays 0017 to 0032 are "5678h"**

ACK Reply

| Function code | Number of data | Read value | | | |
|---|---|---|---|---|---|
| 02h | 04h | 34h | 12h | 78h | 56h |
| (1 byte) | (1 byte) | (1st byte) | (2nd byte) | (3rd byte) | (4th byte) |

**Example: Try to access an input relay with a slave address outside the range**

NAK Reply

| Function code | Error code |
|---|---|
| 82h | 02h |
| (1 byte) | (1 byte) |

For details on the error code, refer to "Error code" on page 4-5.

Read the value of the holding register or input register

The host device (Modbus TCP client) reads the value of the holding register or input register of the KW2D Smart RFID Reader (Modbus TCP Server). The number of continuous read words is 1 to 32 words. The function code is "03h" for the holding register and "04h" for the input register. In case of error, the function code is "83h" (03h + 80h) for the holding register and "84h" (04h + 80h) for the input register.

**Example: Read data for 32 words from input register 0001**

Request

| Function code | Start address number | | Number of words of data to read | |
|---|---|---|---|---|
| 04h | 00h | 00h | 00h | 20h |
| (1 byte) | (2 bytes) | | (2 bytes) | |

**The value of the input register 0001 is "1234h", the value of the input register 0002 is "2345h", ..., the value of the input register 0032 is "5678h".**

ACK Reply

| Function code | Number of data | Read value | | | | | | |
|---|---|---|---|---|---|---|---|---|
| 04h | 40h | 12h | 34h | 23h | 45h | ... | 56h | 78h |
| (1 byte) | (1 byte) | (1st byte) | (2nd byte) | (3rd byte) | (4th byte) | ... | (63th byte) | (64th byte) |

**Example: Try to access the input register of a slave address outside the range**

NAK Reply

| Function code | Error code |
|---|---|
| 84h | 02h |
| (1 byte) | (1 byte) |

For details on the error code, refer to "Error code" on page 4-5.

Write the value to the coil relay.

The host device (Modbus TCP client) can write to the coil relay of the KW2D Smart RFID Reader (Modbus TCP Server). When writing a value to one address number, the function code is "05h". When 0 is written, the value to write will be "0000h", and when 1 is written, it will be "FF00h". When writing values to multiple consecutive address numbers, the function code is "0Fh". The value to write is stored in order from the lower bit of the first byte. The function code for error is "85h" (05h+80h) in the case of writing to one address number, and "8Fh" (0Fh+80h) in the case of writing to multiple address numbers.

**Example: Write 1 to coil relay 0001**

Request

| Function code | Start address number | | Value to write | |
|---|---|---|---|---|
| 05h | 00h | 00h | FFh | 00h |
| (1 byte) | (2 bytes) | | (2 bytes) | |

ACK Reply

| Function code | Start address number | | Written value | |
|---|---|---|---|---|
| 05h | 00h | 00h | FFh | 00h |
| (1 byte) | (2 bytes) | | (2 bytes) | |

**Example: Try to access one coil relay with a slave address outside the range.**

NAK Reply

| Function code | Error code |
|---|---|
| 85h | 02h |
| (1 byte) | (1 byte) |

For details on the error code, refer to "Error code" on page 4-5.

**Example: Write 0 to coil relay 0007 and 1 to coil relay 0008.**

Request

| Function code | Start address number | | Number of bits to write | | Number of data to write | Data to write |
|---|---|---|---|---|---|---|
| 0Fh | 00h | 06h | 00h | 02h | 01h | 02h |
| (1 byte) | (2 bytes) | | (2 bytes) | | (1 byte) | (1 byte) |

ACK Reply

| Function code | Start address number | | Number of bits written | |
|---|---|---|---|---|
| 0Fh | 00h | 06h | 00h | 02h |
| (1 byte) | (2 bytes) | | (2 bytes) | |

**Example: Try to access multiple coil relays of the slave address outside the range**

NAK Reply

| Function code | Error code |
|---|---|
| 8Fh | 02h |
| (1 byte) | (1 byte) |

For details on the error code, refer to "Error code" on page 4-5.

Write the value to the holding register.

The host device (Modbus TCP client) can write to the holding register of the KW2D Smart RFID Reader (Modbus TCP Server). When writing a value to one address number, the function code is "06h". When writing values to multiple consecutive address numbers, the function code is "10h". The function code for error is "86h" (06h+80h) in the case of writing to one address number, and "90h" (10h+80h) in the case of writing to multiple address numbers.

**Example: Write "0103h" to holding register 0008**

Request

| Function code | Start address number | | Data to write: Upper byte | Data to write: Lower byte |
|---|---|---|---|---|
| 06h | 00h | 07h | 01h | 03h |
| (1 byte) | (2 bytes) | | (2 bytes) | |

ACK Reply

| Function code | Start address number | | Written value: Upper byte | Written value: Lower byte |
|---|---|---|---|---|
| 06h | 00h | 07h | 01h | 03h |
| (1 byte) | (2 bytes) | | (2 bytes) | |

**Example: Try to access one holding register with a slave address outside the range.**

NAK Reply

| Function code | Error code |
|---|---|
| 86h | 02h |
| (1 byte) | (1 byte) |

For details on the error code, refer to "Error code" on page 4-5.

**Example: Write "8003h", "1234h", ..., "5678h" to the holding registers 0008 to 0032 (25 words).**

Request

| Function code | Start address number | | Number of words to write | Number of data to write | Data to write: Upper byte | Data to write: Lower byte | Data to write: Upper byte | Data to write: Lower byte | | Data to write: Upper byte | Data to write: Lower byte |
|---|---|---|---|---|---|---|---|---|---|---|---|
| 10h | 00h | 07h | 19h | 32h | 80h | 03h | 12h | 34h | ... | 56h | 78h |
| (1 byte) | (2 bytes) | | (1 byte) | (1 byte) | (1 byte) | (1 byte) | (1 byte) | (1 byte) | ... | (1 byte) | (1 byte) |

ACK Reply

| Function code | Start address number | | Number of words written |
|---|---|---|---|
| 10h | 00h | 07h | 19h |
| (1 byte) | (2 bytes) | | (1 byte) |

**Example: Try to access multiple holding registers for slave addresses that are out of range**

NAK Reply

| Function code | Error code |
|---|---|
| 90h | 02h |
| (1 byte) | (1 byte) |

For details on the error code, refer to "Error code".

● Error code

The error code stored in the NG response is as follows.

| Error code | Contents | Details |
|---|---|---|
| 01h | Function code error | Received an unsupported function code. |
| 02h | Access destination error | An attempt was made to read or write a slave address outside the range. |
| 03h | Number of data error<br>1-bit write data error | The number of bits, words, data, or 1-bit write data is incorrect. |
| 12h | Frame length error | Received a frame with a length outside the range. |

## 1.3 Modbus TCP Communication Shared Memory

Shared memory is memory accessed from a Modbus TCP client.

When the power is turned on or reset, the initial value is set in the shared memory.

● Input relay (100001 to 100032)

The host device can read the value of the input relay of the KW2D Smart RFID Reader via the input relay of the Modbus TCP server.

R: Read

| Modbus TCP (Server) | Shared Memory | | | | |
|---|---|---|---|---|---|
| **Address No.** | **Address No.** | **Description** | **Explanation** | **Attri-butes** | **Initial Value** |
| 100001 | 0001*1 | Verification result | When the tag list is registered to the KW2D Smart RFID Reader and the UID verification result is a match, the value is 1. | R | 0 |
| 100002 | 0002*1 | | When the tag list is registered to the KW2D Smart RFID Reader and the UID verification result is mismatch, the value is 1. | R | 0 |
| 100003 | 0003 | Host communication status | Indicates the communication status of the Host communication.<br>0: Communicating, 1: Not communicating | R | 0 |
| 100004 | 0004 | Project status | Indicates whether the KW2D Series Smart RFID Reader has a project.<br>0: Has a project, 1: No project | R | 0 |
| 100005 | 0005 | Tag list status | Indicates whether or not the tag list is registered in the KW2D Smart RFID Reader.<br>0: Registered, 1: No registration | R | 0 |
| 100006, 100007 | 0006, 0007 | Reserved | - | R | - |
| 100008 | 0008 | Operation mode | You can check the operation mode of the KW2D Smart RFID Reader.<br>0: Running, 1: Stopped | R | 0 |
| 100009 | 0009*1 | Authority D1 | Indicates the authority information of the detected RFID tag.<br>1 to 255: Authority<br>However, the content varies based on whether or not the tag list is registered.<br>With tag list registration: The UID is verified against the tag list. If OK, the authority registered in the tag list is read. For a KW2D special tag, if authority 1 to 254 is specified in the tag list, the authority registered in the tag list is read. If 255 is specified in the tag list, the authority added to the tag is read.<br>No tag list registration: For a KW2D special tag, the authority held in the tag is read. For other tags, 0 is read. | R | 0 |
| 100010 | 0010*1 | Authority D2 | | R | 0 |
| 100011 | 0011*1 | Authority D3 | | R | 0 |
| 100012 | 0012*1 | Authority D4 | | R | 0 |
| 100013 | 0013*1 | Authority D5 | | R | 0 |
| 100014 | 0014*1 | Authority D6 | | R | 0 |
| 100015 | 0015*1 | Authority D7 | | R | 0 |
| 100016 | 0016*1 | Authority D8 | | R | 0 |
| 100017 | 0017*1 | KW2D special tag detection | 0: KW2D special tag not detected, 1: KW2D Series special tag detected | R | 0 |
| 100018 | 0018 | Reserved | - | R | - |

*1 After reading the RFID tag, the tag information is retained for up to three seconds. After that, it is set to the initial value.

| Modbus TCP (Server) | Shared Memory | | | | |
|---|---|---|---|---|---|
| **Address No.** | **Address No.** | **Description** | **Explanation** | **Attri-butes** | **Initial Value** |
| 100019 | 0019*1 | Command execution status | 0: Waiting for command, 1: Executing command (holds for up to two seconds then returns to 0. When the value of the holding register 0008 is set to 0, this value is also set to 0.) | R | 0 |
| 100020 | 0020 | Command execution error | 0: Normal, 1: Execution error (holds for up to two seconds then returns to 0. When the value of the holding register 0008 is set to 0, this value is also set to 0.) | R | 0 |
| 100021 | 0021 | Editing status of tag information | The value is 1 during registration. | R | 0 |
| 100022 | 0022 | | The value is 1 during deletion. | R | 0 |
| 100023 to 100032 | 0023 to 0032 | Reserved | - | R | - |

An undefined value is stored in the address number with "Reserved" in the Contents.

*1 After reading the RFID tag, the tag information is retained for up to three seconds. After that, it is set to the initial value.

● Input register (300001 to 300032)

The host device can read the value of the input register of the KW2D Smart RFID Reader via the input register of the Modbus TCP server.

R: Read

| Modbus TCP (Server) | Shared Memory | | | | | |
|---|---|---|---|---|---|---|
| **Address No.** | **Address No.** | **Description** | | **Explanation** | **Attri-butes** | **Initial Value** |
| 300001 | 0001 | Reserved | | - | R | - |
| 300002 | 0002 | Tag information*1 | Status, Verification result or Authority | 65535: Reading RFID tag<br>Other than reading RFID tag, the status is as follows.<br>Upper byte: Status of KW2D Smart RFID Reader<br>00h: Operation mode (running)<br>01h: Tag edit mode (registering)<br>02h: Tag edit mode (deleting)<br>Lower byte: Verification result or Authority<br>0: Not match, 1 to 255: Authority<br>However, the content varies based on whether or not the tag list is registered.<br>With tag list registration: The UID is verified with the tag list. If OK, the authority registered in the tag list is stored. For a KW2D special tag, if authority 1 to 254 is specified in the tag list, the authority registered in the tag list is stored. If 255 is specified in the tag list, the authority assigned to the special tag is stored.<br>No tag list registration: For a KW2D special tag, the authority assigned to the special tag is stored. For other tags, 0 is stored. | R | 65535 |
| 300003 | 0003 | | UID data length | 0: UID not stored, 1 to 10: Number of bytes | R | 0 |
| 300004 | 0004 | | UID | Stored in order of upper byte (1st byte) and lower byte (2nd byte) | R | 0 |
| 300005 | 0005 | | | Stored in order of upper byte (3rd byte) and lower byte (4th byte) | R | 0 |
| 300006 | 0006 | | | Stored in order of upper byte (5th byte) and lower byte (6th byte) | R | 0 |
| 300007 | 0007 | | | Stored in order of upper byte (7th byte) and lower byte (8th byte) | R | 0 |
| 300008 | 0008 | | | Stored in order of upper byte (9th byte) and lower byte (10th byte) | R | 0 |
| 300009 to 300011 | 0009 to 0011 | | Reserved | - | R | - |

*1 After reading the RFID tag, the tag information is retained for up to 3 seconds. After that, it is set to the initial value.

| Modbus TCP (Server) | Shared Memory | | | | | |
|---|---|---|---|---|---|---|
| **Address No.** | **Address No.** | **Description** | | **Explanation** | **Attri-butes** | **Initial Value** |
| 300012 | 0012 | Tag information*1 | Name1 | Stored in order of upper byte (1st character) and lower byte (2nd character) | R | 0 |
| 300013 | 0013 | | | Stored in order of upper byte (3rd character) and lower byte (4th character) | R | 0 |
| 300014 | 0014 | | | Stored in order of upper byte (5th character) and lower byte (6th character) | R | 0 |
| 300015 | 0015 | | | Stored in order of upper byte (7th character) and lower byte (8th character) | R | 0 |
| 300016 | 0016 | | | Stored in order of upper byte (9th character) and lower byte (10th character) | R | 0 |
| 300017 | 0017 | | | Stored in order of upper byte (11th character) and lower byte (12th character) | R | 0 |
| 300018 | 0018 | | | Stored in order of upper byte (13th character) and lower byte (14th character) | R | 0 |
| 300019 | 0019 | | | Stored in order of upper byte (15th character) and lower byte (16th character) | R | 0 |
| 300020 | 0020 | | | Stored in order of upper byte (17th character) and lower byte (18th character) | R | 0 |
| 300021 | 0021 | | Reserved | - | R | - |
| 300022 | 0022 | | Name2 | Stored in order of upper byte (1st character) and lower byte (2nd character) | R | 0 |
| 300023 | 0023 | | | Stored in order of upper byte (3rd character) and lower byte (4th character) | R | 0 |
| 300024 | 0024 | | | Stored in order of upper byte (5th character) and lower byte (6th character) | R | 0 |
| 300025 | 0025 | | | Stored in order of upper byte (7th character) and lower byte (8th character) | R | 0 |
| 300026 | 0026 | | | Stored in order of upper byte (9th character) and lower byte (10th character) | R | 0 |
| 300027 | 0027 | | | Stored in order of upper byte (11th character) and lower byte (12th character) | R | 0 |
| 300028 | 0028 | | | Stored in order of upper byte (13th character) and lower byte (14th character) | R | 0 |
| 300029 | 0029 | | | Stored in order of upper byte (15th character) and lower byte (16th character) | R | 0 |
| 300030 | 0030 | | | Stored in order of upper byte (17th character) and lower byte (18th character) | R | 0 |
| 300031 | 0031*2 | | Number of detections | Stores the number of RFID tag detections. | R | 0 |
| 300032 | 0032 | Lock operation time (current value) | | Stores the lock operation time during downcounting. | R | 0 |

An undefined value is stored in the address number with "Reserved" in the Contents.

*1 After reading the RFID tag, the tag information is retained for up to three seconds. After that, it is set to the initial value.
*2 The input register 0031 (number of detections) counts up for each tag detection. Since the tag information value is updated at the same time as the count is increased, the memory update timing can be grasped by monitoring the change in the number of detections.

● Coil Relay (000001 to 000016)

The host device can write values to the coil relay of the KW2D smart RFID reader via the coil relay of the Modbus TCP server.

W: Write

| Modbus TCP (Server) | Shared Memory | | | | |
|---|---|---|---|---|---|
| **Address No.** | **Address No.** | **Description** | **Explanation** | **Attri-butes** | **Initial Value** |
| 000001 | 0001 | Switching operation mode | Switches the operation mode of the KW2D Smart RFID Reader.<br>0: to Running, 1: to Stopped | W | 0 |
| 000002 | 0002 | Releasing lock operation | When the value changes to 1, the lock operation is released. | W | 0 |
| 000003 | 0003 | Pausing lock operation timer | When the value changes to 1, counting the lock operation time is paused. | W | 0 |
| 000004 to 000006 | 0004 to 0006 | Reserved | - | W | - |
| 000007 | 0007 | Verification result on host device | When the verification result of the tag information is "OK command", the host device writes 1. | W | 0 |
| 000008 | 0008 | | When the verification result of the tag information is "Failure command", the host device writes 1. | W | 0 |
| 000009 | 0009 | Manual control of buzzer | Enables or disables the manual operation of the buzzer.<br>0: Disable, 1: Enable | W | 0 |
| 000010 | 0010 | Ring or stop the buzzer | Operate the buzzer.<br>0: Stop, 1: Ring | W | 0 |
| 000011 | 0011 | Manual control of the LEDs (red) | Enables or disables the manual operation of the LEDs (red).<br>0: Disable, 1: Enable | W | 0 |
| 000012 | 0012 | Turn on or off the LEDs (red) | Operate the LEDs (red).<br>0: Turn off, 1: Turn on | W | 0 |
| 000013 | 0013 | Manual control of the LEDs (white) | Enables or disables the manual operation of the LEDs (white).<br>0: Disable, 1: Enable | W | 0 |
| 00004 | 0014 | Turn on or off the LEDs (white) | Operate the LEDs (white).<br>0: Turn off, 1: Turn on | W | 0 |
| 000015 | 0015 | Manual control of the LEDs (green) | Enables or disables the manual operation of the LEDs (green).<br>0: Disable, 1: Enable | W | 0 |
| 000016 | 0016 | Turn on or off the LEDs (green) | Operate the LEDs (green).<br>0: Turn off, 1: Turn on | W | 0 |

Do not write a value other than 0 to the address number with "Reserved" in the Contents.

● Holding Register (400001 to 400032)

The host device can write values to the holding register of the KW2D smart RFID reader via the holding register of the Modbus TCP server.

W: Write

| Modbus TCP (Server) | Shared Memory | | | | |
|---|---|---|---|---|---|
| **Address No.** | **Address No.** | **Description** | **Explanation** | **Attri-butes** | **Initial Value** |
| 400001 to 400007 | 0001 to 0007 | Reserved | - | W | - |
| 400008 | 0008 | Command Authority | Upper byte: Specify the command to be executed with the following values.<br>00h: Clear command<br>To execute the same command continuously, set 00h between commands.<br>01h: Registration<br>Shifts to "tag edit mode (registering)". The authority set in the lower byte of the holding register 0008 will be the default.<br>02h: Delete<br>Shifts to "tag edit mode (deleting)".<br>04h: Cancel<br>Discards the contents registered or deleted while the "tag edit mode" and returns to the "operation mode".<br>08h: Exit<br>When any changes have been made to the tag list, the changes are reflected in the tag list of the KW2D Smart RFID Reader, and the KW2D Smart RFID Reader restarts.<br>When there are no changes in the tag list, it returns to the "operation mode".<br>10h: Update<br>When the KW2D Smart RFID Reader is in the "tag edit mode (registering)", the contents of holding registers 0008 to 0032 are reflected in the tag list of the KW2D Smart RFID Reader.<br>Lower byte: Specify the authority (1 to 255) for the UID. However, 0 is treated as 255. | W | 0 |
| 400009 | 0009 | UID data length | 0: UID not stored, 1 to 10: Number of bytes | W | 0 |
| 400010 | 0010 | UID | Stored in order of upper byte (1st byte) and lower byte (2nd byte) | W | 0 |
| 400011 | 0011 | | Stored in order of upper byte (3rd byte) and lower byte (4th byte) | W | 0 |
| 400012 | 0012 | | Stored in order of upper byte (5th byte) and lower byte (6th byte) | W | 0 |
| 400013 | 0013 | | Stored in order of upper byte (7th byte) and lower byte (8th byte) | W | 0 |
| 400014 | 0014 | | Stored in order of upper byte (9th byte) and lower byte (10th byte) | W | 0 |

| Modbus TCP (Server) | Shared Memory | | | | |
|---|---|---|---|---|---|
| **Address No.** | **Address No.** | **Description** | **Explanation** | **Attri-butes** | **Initial Value** |
| 400015 | 0015 | Name1 | Stored in order of upper byte (1st character) and lower byte (2nd character) | W | 0 |
| 400016 | 0016 | | Stored in order of upper byte (3rd character) and lower byte (4th character) | W | 0 |
| 400017 | 0017 | | Stored in order of upper byte (5th character) and lower byte (6th character) | W | 0 |
| 400018 | 0018 | | Stored in order of upper byte (7th character) and lower byte (8th character) | W | 0 |
| 400019 | 0019 | | Stored in order of upper byte (9th character) and lower byte (10th character) | W | 0 |
| 400020 | 0020 | | Stored in order of upper byte (11th character) and lower byte (12th character) | W | 0 |
| 400021 | 0021 | | Stored in order of upper byte (13th character) and lower byte (14th character) | W | 0 |
| 400022 | 0022 | | Stored in order of upper byte (15th character) and lower byte (16th character) | W | 0 |
| 400023 | 0023 | | Stored in order of upper byte (17th character) and lower byte (18th character) | W | 0 |
| 400024 | 0024 | Name2 | Stored in order of upper byte (1st character) and lower byte (2nd character) | W | 0 |
| 400025 | 0025 | | Stored in order of upper byte (3rd character) and lower byte (4th character) | W | 0 |
| 400026 | 0026 | | Stored in order of upper byte (5th character) and lower byte (6th character) | W | 0 |
| 400027 | 0027 | | Stored in order of upper byte (7th character) and lower byte (8th character) | W | 0 |
| 400028 | 0028 | | Stored in order of upper byte (9th character) and lower byte (10th character) | W | 0 |
| 400029 | 0029 | | Stored in order of upper byte (11th character) and lower byte (12th character) | W | 0 |
| 400030 | 0030 | | Stored in order of upper byte (13th character) and lower byte (14th character) | W | 0 |
| 400031 | 0031 | | Stored in order of upper byte (15th character) and lower byte (16th character) | W | 0 |
| 400032 | 0032 | | Stored in order of upper byte (17th character) and lower byte (18th character) | W | 0 |

Do not write a value other than 0 to the address number with "Reserved" in the Contents.

# 2 EtherNet/IP Communication (Adapter)

## 2.1 Overview

The KW2D Series Smart RFID Reader works as an adapter in EtherNet/IP communication and communication can be performed with devieces such as programmable display, PLC, that are compatible with EtherNet/IP communication. EtherNet/IP communication also uses standard Ethernet technologies, which allows networks to be built that include various Ethernet-compatible devices.

**Multi-vendor networks between EtherNet/IP devices**
You can build a multi-vendor network with EtherNet/IP equipment.

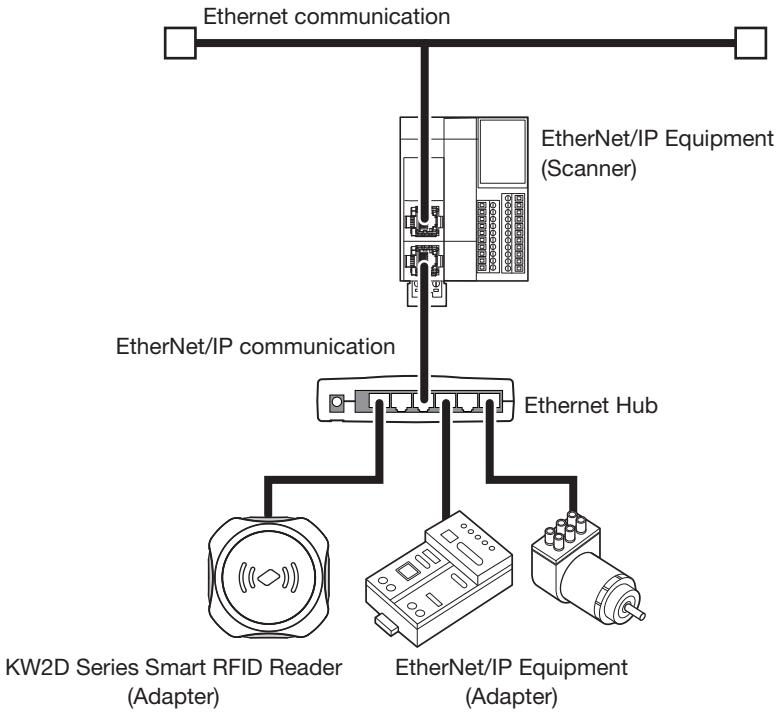


When EtherNet/IP communication and other Ethernet communications are performed simultaneously on the same network, data may no longer be transmitted or received at the intended timing, depending on the load status. In this situation, build the network using an Ethernet switch that supports the QoS function and adjust the priority of data that flows on the network.

## ● Communication Specifications

| Items | | | Specifications |
|---|---|---|---|
| Supported protocols | | | EtherNet/IP communication (adapter) |
| Supported ports | | | Ethernet port |
| Action | | | Targeted equipment |
| Port number | | | 44818 (Class 3), 2222 (Class 1) |
| Vendor ID | | | 159 |
| I/O message communication functions | Number of CIP connections | | 3*1 |
| | CIP connection points | Number of settings | 4 |
| | | IN | Instance ID: 100 (36 words) |
| | | OUT | Instance ID: 200 (36 words) |
| | | | Instance ID: 198 (for Input Only) |
| | | | Instance ID: 199 (for Listen Only) |
| | RPI (communication cycle) | | 10 to 2000ms |
| | CIP Connection Type | | Exclusive Owner/Input Only/Listen Only |
| Explicit message communication function | Class 3 (connection type) | Server | Support (number of CIP connections: 3*2) |
| | | Clients | Unsupported |
| | UCMM | Server | Support (number of CIP connections: 3*2) |
| | | Clients | Unsupported |

## ● EtherNet/IP Communication Shared Memory

The EtherNet/IP communication shared memory is the memory that can be accessed from an EtherNet/IP scanner. When **EtherNet/IP Adapter** is selected in **Communication Mode** of **Connection Settings** on **RFID Reader Settings** tab, the shared memory of the KW2D Smart RFID Reader can be read or written via the shared memory for EtherNet/IP communication. For the assignment of the shared memory, refer to "Memory Assignment for I/O message communication" on page 4-19.

When the power is turned on or reset, the initial value is set in the shared memory.

*1 The maximum number of connections is 3 in total with the CIP connections used in the class 3 (connection type) explicit message communication function.
*2 The maximum number of connections is 3 in total with the CIP connections used in I/O message communication function.

## 2.2 EtherNet/IP Adapters

The KW2D Series Smart RFID Reader provides the following functions as an adapter for EtherNet/IP devices

- I/O message communication (target) function (Class 1 communication)
- Class3/UCMM communication

### ● I/O Message Communication Overview

**■ What is I/O Message Communication?**

I/O message communication is a function that allows EtherNet/IP devices to cyclically read and write data with each other. The target unit for reading/writing data is called a CIP connection point. CIP tag names and instance IDs are assigned to CIP connection points. In I/O message communication, an EtherNet/IP device reads/writes data by specifying the CIP tag name or instance ID of a CIP connection point.

**■ What is a CIP connection?**

A CIP connection is a virtual communication line between EtherNet/IP devices. In I/O message communication, one device sends a request to open a CIP connection to the CIP connection point of the other device, and when successful, data is read and written.The side that sends the request to open the CIP connection is called the originator. The side that receives the request is called the target. The KW2D Series Smart reader can be the target. The KW2D Series Smart reader can open 3 CIP connections at the same time.

### ● Types of CIP Connections

There are the following three types of CIP connections. Exclusive Owner can transmit and receive data. Input Only and Listen Only can only receive data.

**■ Exclusive Owner**

This CIP connection cyclically transmits data from the target to the originator (1) and cyclically transmits data from the originator to the target (2). The CIP connection point is specified as a CIP tag name or an instance ID. Communication is performed at the cycle (RPI) specified when the CIP connection is opened*1. Data can be transmitted and received when the originator opens*2 the connection.

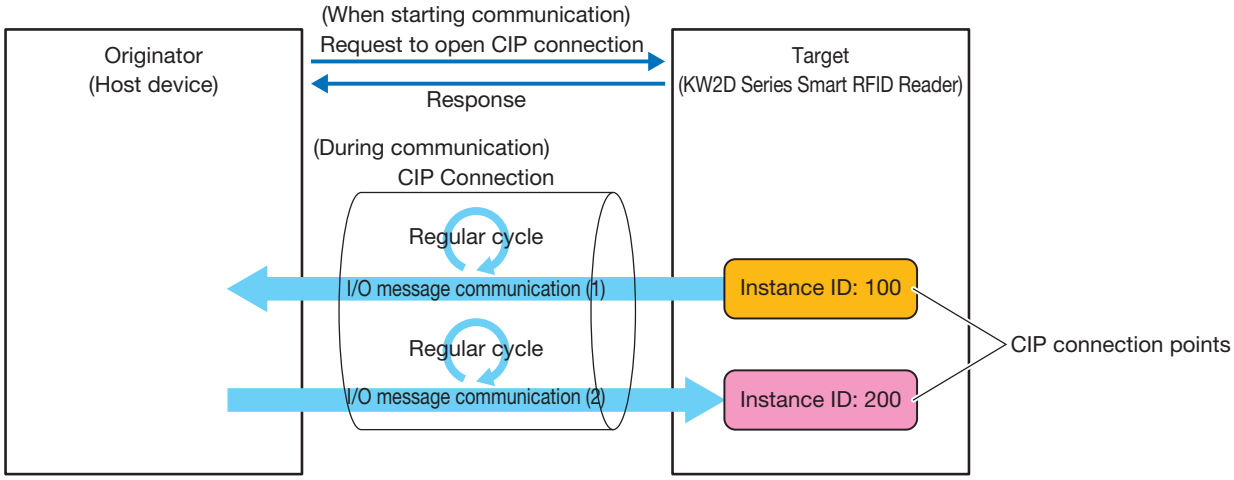


*1 Class 1 communication (cyclic communication) is performed.
*2 Request a ForwardOpen service from the originator for Class 3 communication and open a connection.

### Input Only

This CIP connection cyclically transmits data from the target to the originator (1). The CIP connection point is specified as an instance ID. Communication is performed at the cycle (RPI) specified when the CIP connection is opened. In order for the target to perform alive monitoring of the originator, a heartbeat that does not include data is cyclically transmitted from the originator to the target. The originator specifies the Input Only instance ID (198) on the target as the destination for the heartbeat. The heartbeat is transmitted at the specified cycle (RPI).

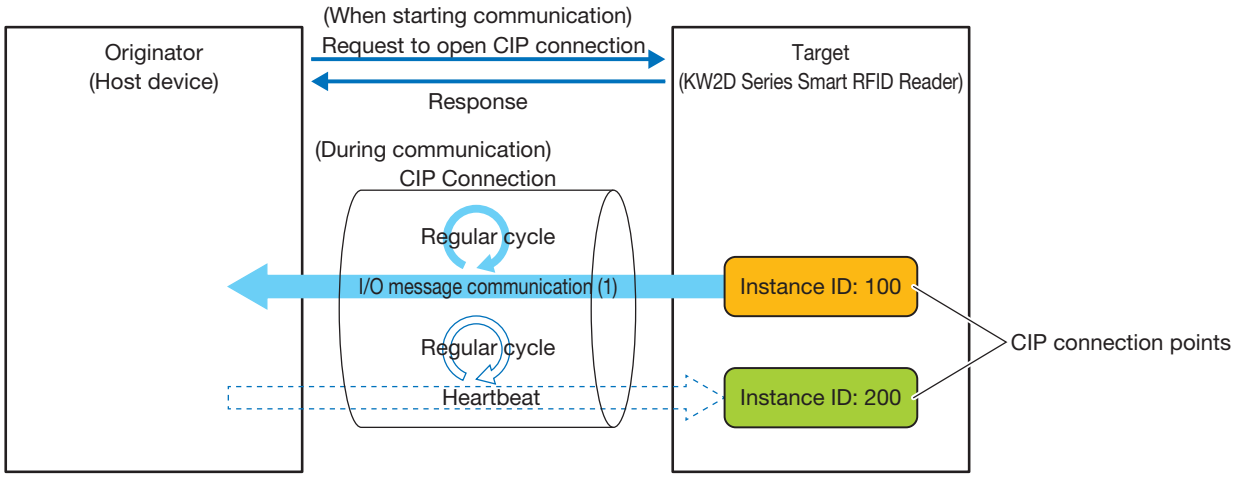


- For Input Only, please set the heartbeat of the CIP connectionpoint as an instance ID too.
- The heartbeat is always performed in Input Only.

### Listen Only

This CIP connection cyclically receives data for originators from a target that already has a multicast type CIP connection using Exclusive Owner or Input Only opened. Set this connection type to simultaneously receive data when the target transmits that data by multicast to other originators. The CIP connection point is specified as an instance ID. Communication is performed at the cycle (RPI) specified when the CIP connection is opened. In order for the target to perform alive monitoring of the originator, a heartbeat that does not include data is cyclically transmitted from the originator to the target.
The originator specifies the Listen Only instance ID (199) on the target as the destination for the heartbeat. The heartbeat is transmitted at the specified cycle (RPI).

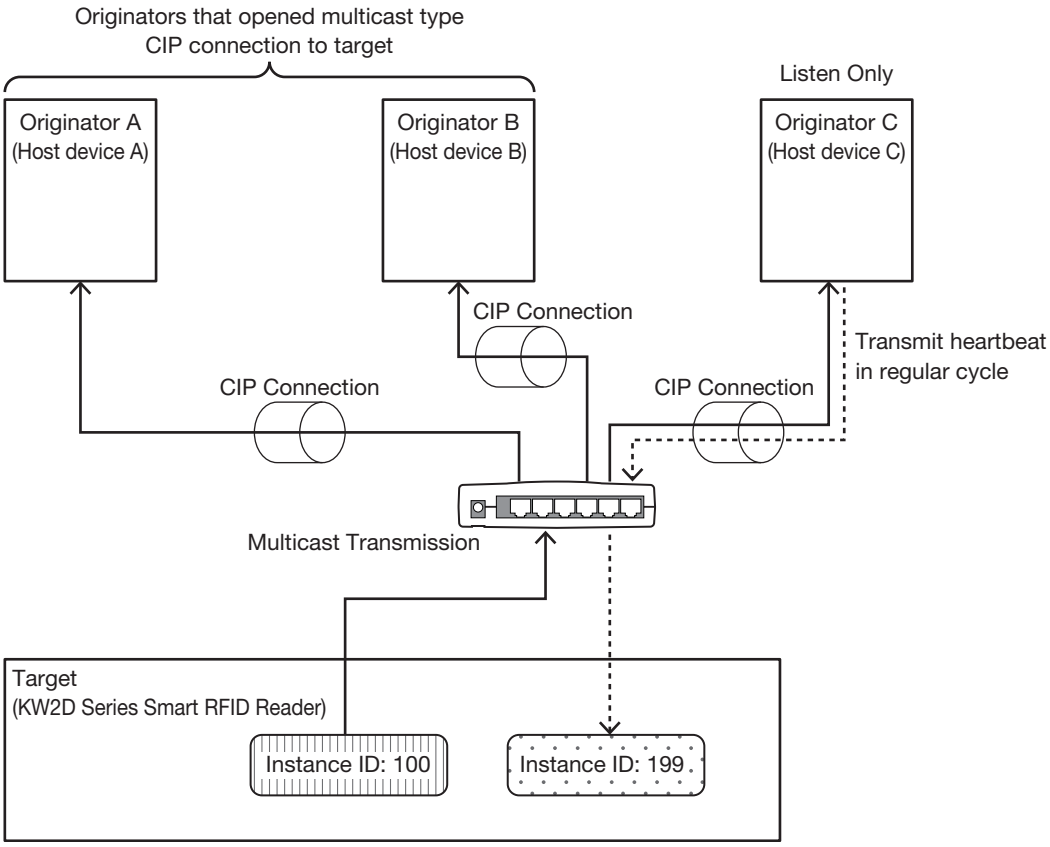


- For Listen Only, please set the CIP connection point of the input data to receive from the target as an instance ID.
- The heartbeat is always performed in Listen Only.

A Listen Only CIP connection can be opened only when a multicast type CIP connection is opened. When the CIP connection between the target and originator that opened a multicast type CIP connection using Exclusive Owner or Input Only is disconnected, the multicast transmissions from the target to originators that opened Listen Only CIP connections are stopped.

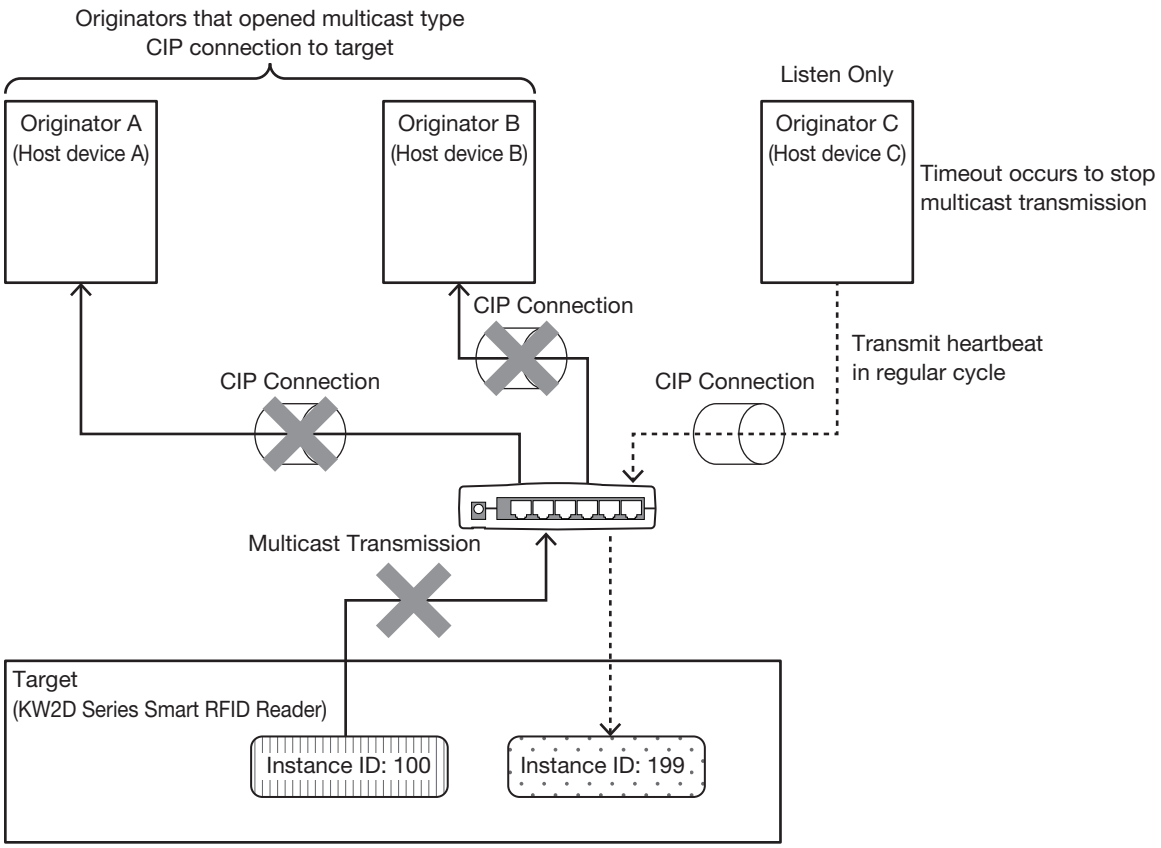


● Transmit Trigger Type

There are two types of transmission triggers for KW2D Series Smart RFID Readers

- **Cyclic**

  Send data from the originator to the target or from the target to the originator at every regular cycle in the RPI.

- **Change Of State**

  Send data when there is a change from originator to target or from target to originator. If there is no change in data, it will send data at every regular cycle in the RPI.

● Types of connections

There are two types of KW2D Series Smart RFID Readers with the following connection types

- **Point To Point**

  Send data from the originator to the target or from the target to the originator by one-to-one.

- **Multicast**

  Sends data from the target to the multicast addresses of multiple originators. The direction of the target from the originator is not supported.

● Memory Assignment for I/O message communication

The host device reads and writes the shared memory of the KW2D Series Smart RFID Reader via the Input Assembly and Output Assembly.

■ **Input Assembly (Instance ID: 100) (0 to 3)**

The host device can read the value of the input relay in the KW2D Smart RFID Reader via the Input Assembly (0 to 3).

R: Read

| EtherNet/IP (Adapter) | | Shared Memory | | | | |
|---|---|---|---|---|---|---|
| **Address No.** | **Bit No.** | **Address No.** | **Description** | **Explanation** | **Attri-butes** | **Initial Value** |
| 0 | 0 | 0001*1 | Verification result | When the tag list is registered to the KW2D Smart RFID Reader and the UID verification result is a match, the value is 1. | R | 0 |
| | 1 | 0002*1 | | When the tag list is registered to the KW2D Smart RFID Reader and the UID verification result is mismatch, the value is 1. | R | 0 |
| | 2 | 0003 | Host communication status | Indicates the communication status of the Host communication.<br>0: Communicating, 1: Not communicating | R | 0 |
| | 3 | 0004 | Project status | Indicates whether the KW2D Series Smart RFID Reader has a project.<br>0: Has a project, 1: No project | R | 0 |
| | 4 | 0005 | Tag list status | Indicates whether or not the tag list is registered in the KW2D Smart RFID Reader.<br>0: Registered, 1: No registration | R | 0 |
| | 5, 6 | 0006, 0007 | Reserved | - | R | - |
| | 7 | 0008 | Operation mode | You can check the operation mode of the KW2D Smart RFID Reader.<br>0: Running, 1: Stopped | R | 0 |
| | 8 | 0009*1 | Authority D1 | Indicates the authority information of the detected RFID tag.<br>1 to 255: Authority<br>However, the content varies based on whether or not the tag list is registered.<br>With tag list registration: The UID is verified against the tag list. If OK, the authority registered in the tag list is read. For a KW2D special tag, if authority 1 to 254 is specified in the tag list, the authority registered in the tag list is read. If 255 is specified in the tag list, the authority added to the tag is read.<br>No tag list registration: For a KW2D special tag, the authority held in the tag is read. For other tags, 0 is read. | R | 0 |
| | 9 | 0010*1 | Authority D2 | | R | 0 |
| | 10 | 0011*1 | Authority D3 | | R | 0 |
| | 11 | 0012*1 | Authority D4 | | R | 0 |
| | 12 | 0013*1 | Authority D5 | | R | 0 |
| | 13 | 0014*1 | Authority D6 | | R | 0 |
| | 14 | 0015*1 | Authority D7 | | R | 0 |
| | 15 | 0016*1 | Authority D8 | | R | 0 |

*1 After reading the RFID tag, the tag information is retained for up to three seconds. After that, it is set to the initial value.

| EtherNet/IP (Adapter) | | Shared Memory | | | | |
|---|---|---|---|---|---|---|
| **Address No.** | **Bit No.** | **Address No.** | **Description** | **Explanation** | **Attri-butes** | **Initial Value** |
| 1 | 0 | 0017*1 | KW2D special tag detection | 0: KW2D special tag not detected, 1: KW2D Series special tag detected | R | 0 |
| | 1 | 0018 | Reserved | - | R | - |
| | 2 | 0019*1 | Command execution status | 0: Waiting for command, 1: Executing command (holds for up to two seconds then returns to 0. When the value of the holding register 0008 is set to 0, this value is also set to 0.) | R | 0 |
| | 3 | 0020 | Command execution error | 0: Normal, 1: Execution error (holds for up to two seconds then returns to 0. When the value of the holding register 0008 is set to 0, this value is also set to 0.) | R | 0 |
| | 4 | 0021 | Editing status of tag information | The value is 1 during registration. | R | 0 |
| | 5 | 0022 | | The value is 1 during deletion. | R | 0 |
| | 6 to 15 | 0023 to 0032 | Reserved | - | R | - |
| 2 | 0 to 15 | 0033 to 0048 | Reserved | - | R | - |
| 3 | 0 to 15 | 0049 to 0064 | Reserved | - | R | - |

An undefined value is stored in the address number with "Reserved" in the Contents.

*1 After reading the RFID tag, the tag information is retained for up to three seconds. After that, it is set to the initial value.

## Input Assembly (Instance ID: 100) (4 to 35)

The host device can read the value of the input register in the KW2D Smart RFID Reader via the Input Assembly (4 to 35).

R: Read

| EtherNet/IP (Adapter) | Shared Memory | | | | | |
|---|---|---|---|---|---|---|
| **Address No.** | **Address No.** | **Description** | | **Explanation** | **Attri-butes** | **Initial Value** |
| 4 | 0001 | Reserved | | - | R | - |
| 5 | 0002 | Tag information*1 | Status, Verification result or Authority | 65535: Reading RFID tag<br>Other than reading RFID tag, the status is as follows.<br>Upper byte: Status of KW2D Smart RFID Reader<br>00h: Operation mode (running)<br>01h: Tag edit mode (registering)<br>02h: Tag edit mode (deleting)<br>Lower byte: Verification result or Authority<br>0: Not match, 1 to 255: Authority<br>However, the content varies based on whether or not the tag list is registered.<br>With tag list registration: The UID is verified with the tag list. If OK, the authority registered in the tag list is stored. For a KW2D special tag, if authority 1 to 254 is specified in the tag list, the authority registered in the tag list is stored. If 255 is specified in the tag list, the authority assigned to the special tag is stored.<br>No tag list registration: For a KW2D special tag, the authority assigned to the special tag is stored. For other tags, 0 is stored. | R | 65535 |
| 6 | 0003 | | UID data length | 0: UID not stored, 1 to 10: Number of bytes | R | 0 |
| 7 | 0004 | | UID | Stored in order of upper byte (1st byte) and lower byte (2nd byte) | R | 0 |
| 8 | 0005 | | | Stored in order of upper byte (3rd byte) and lower byte (4th byte) | R | 0 |
| 9 | 0006 | | | Stored in order of upper byte (5th byte) and lower byte (6th byte) | R | 0 |
| 10 | 0007 | | | Stored in order of upper byte (7th byte) and lower byte (8th byte) | R | 0 |
| 11 | 0008 | | | Stored in order of upper byte (9th byte) and lower byte (10th byte) | R | 0 |
| 12 to 14 | 0009 to 0011 | | Reserved | - | R | - |

*1 After reading the RFID tag, the tag information is retained for up to three seconds. After that, it is set to the initial value.

| EtherNet/IP (Adapter) | Shared Memory | | | | | |
|---|---|---|---|---|---|---|
| Address No. | Address No. | Description | | Explanation | Attri-butes | Initial Value |
| 15 | 0012 | Tag information*1 | Name1 | Stored in order of upper byte (1st character) and lower byte (2nd character) | R | 0 |
| 16 | 0013 | | | Stored in order of upper byte (3rd character) and lower byte (4th character) | R | 0 |
| 17 | 0014 | | | Stored in order of upper byte (5th character) and lower byte (6th character) | R | 0 |
| 18 | 0015 | | | Stored in order of upper byte (7th character) and lower byte (8th character) | R | 0 |
| 19 | 0016 | | | Stored in order of upper byte (9th character) and lower byte (10th character) | R | 0 |
| 20 | 0017 | | | Stored in order of upper byte (11th character) and lower byte (12th character) | R | 0 |
| 21 | 0018 | | | Stored in order of upper byte (13th character) and lower byte (14th character) | R | 0 |
| 22 | 0019 | | | Stored in order of upper byte (15th character) and lower byte (16th character) | R | 0 |
| 23 | 0020 | | | Stored in order of upper byte (17th character) and lower byte (18th character) | R | 0 |
| 24 | 0021 | | Reserved | - | R | - |
| 25 | 0022 | | Name2 | Stored in order of upper byte (1st character) and lower byte (2nd character) | R | 0 |
| 26 | 0023 | | | Stored in order of upper byte (3rd character) and lower byte (4th character) | R | 0 |
| 27 | 0024 | | | Stored in order of upper byte (5th character) and lower byte (6th character) | R | 0 |
| 28 | 0025 | | | Stored in order of upper byte (7th character) and lower byte (8th character) | R | 0 |
| 29 | 0026 | | | Stored in order of upper byte (9th character) and lower byte (10th character) | R | 0 |
| 30 | 0027 | | | Stored in order of upper byte (11th character) and lower byte (12th character) | R | 0 |
| 31 | 0028 | | | Stored in order of upper byte (13th character) and lower byte (14th character) | R | 0 |
| 32 | 0029 | | | Stored in order of upper byte (15th character) and lower byte (16th character) | R | 0 |
| 33 | 0030 | | | Stored in order of upper byte (17th character) and lower byte (18th character) | R | 0 |
| 34 | 0031*2 | | Number of detections | Stores the number of RFID tag detections. | R | 0 |
| 35 | 0032 | Lock operation time (current value) | | Stores the lock operation time during downcounting. | R | 0 |

An undefined value is stored in the address number with "Reserved" in the Contents.

*1 After reading the RFID tag, the tag information is retained for up to three seconds. After that, it is set to the initial value.
*2 The input register 0031 (number of detections) counts up for each tag detection. Since the tag information value is updated at the same time as the count is increased, the memory update timing can be grasped by monitoring the change in the number of detections.

### Output Assembly (instance ID: 200) (0 to 3)

The host device can write values to the coil relays of the KW2D smart RFID reader via the Output Assembly (0 to 3).

W: Write

| EtherNet/IP (Adapter) | | Shared Memory | | | | |
|---|---|---|---|---|---|---|
| **Address No.** | **Bit No.** | **Address No.** | **Description** | **Explanation** | **Attri-butes** | **Initial Value** |
| 0 | 0 | 0001 | Switching operation mode | Switches the operation mode of the KW2D Smart RFID Reader.<br>0: to Running, 1: to Stopped | W | 0 |
| | 1 | 0002 | Releasing lock operation | When the value changes to 1, the lock operation is released. | W | 0 |
| | 2 | 0003 | Pausing lock operation timer | When the value changes to 1, counting the lock operation time is paused. | W | 0 |
| | 3 to 5 | 0004 to 0006 | Reserved | - | W | - |
| | 6 | 0007 | Verification result on host device | When the verification result of the tag information is "OK command", the host device writes 1. | W | 0 |
| | 7 | 0008 | | When the verification result of the tag information is "Failure command", the host device writes 1. | W | 0 |
| | 8 | 0009 | Manual control of buzzer | Enables or disables the manual operation of the buzzer.<br>0: Disable, 1: Enable | W | 0 |
| | 9 | 0010 | Ring or stop the buzzer | Operate the buzzer.<br>0: Stop, 1: Ring | W | 0 |
| | 10 | 0011 | Manual control of the LEDs (red) | Enables or disables the manual operation of the LEDs(red).<br>0: Disable, 1: Enable | W | 0 |
| | 11 | 0012 | Turn on or off the LEDs (red) | Operate the LEDs (red).<br>0: Turn off, 1: Turn on | W | 0 |
| | 12 | 0013 | Manual control of the LEDs (white) | Enables or disables the manual operation of the LEDs (white).<br>0: Disable, 1: Enable | W | 0 |
| | 13 | 0014 | Turn on or off the LEDs (white) | Operate the LEDs (white).<br>0: Turn off, 1: Turn on | W | 0 |
| | 14 | 0015 | Manual control of the LEDs (green) | Enables or disables the manual operation of the LEDs (green).<br>0: Disable, 1: Enable | W | 0 |
| | 15 | 0016 | Turn on or off the LEDs (green) | Operate the LEDs (green).<br>0: Turn off, 1: Turn on | W | 0 |
| 1 | 0 to 15 | 0017 to 0032 | Reserved | - | W | - |
| 2 | 0 to 15 | 0033 to 0048 | Reserved | - | W | - |
| 3 | 0 to 15 | 0049 to 0064 | Reserved | - | W | - |

Do not write a value other than 0 to the address number with "Reserved" in the Contents.

### Output Assembly (instance ID: 200) (4 to 35)

The host device can write values to the holding registers of the KW2D smart RFID reader via the Output Assembly (4 to 35).

W: Write

| EtherNet/IP (Adapter) | Shared Memory | | | | |
|---|---|---|---|---|---|
| **Address No.** | **Address No.** | **Description** | **Explanation** | **Attri-butes** | **Initial Value** |
| 4 to 10 | 0001 to 0007 | Reserved | - | W | - |
| 11 | 0008 | Command Authority | Upper byte: Specify the command to be executed with the following values.<br>00h: Clear command<br>To execute the same command continuously, set 00h between commands.<br>01h: Registration<br>Shifts to "tag edit mode (registering)". The authority set in the lower byte of the holding register 0008 will be the default.<br>02h: Delete<br>Shifts to "tag edit mode (deleting)".<br>04h: Cancel<br>Discards the contents registered or deleted while the "tag edit mode" and returns to the "operation mode".<br>08h: Exit<br>When any changes have been made to the tag list, the changes are reflected in the tag list of the KW2D Smart RFID Reader, and the KW2D Smart RFID Reader restarts.<br>When there are no changes in the tag list, it returns to the "operation mode".<br>10h: Update<br>When the KW2D Smart RFID Reader is in the "tag edit mode (registering)", the contents of holding registers 0008 to 0032 are reflected in the tag list of the KW2D Smart RFID Reader.<br>Lower byte: Specify the authority (1 to 255) for the UID.<br>However, 0 is treated as 255. | W | 0 |
| 12 | 0009 | UID data length | 0: UID not stored, 1 to 10: Number of bytes | W | 0 |
| 13 | 0010 | UID | Stored in order of upper byte (1st byte) and lower byte (2nd byte) | W | 0 |
| 14 | 0011 | | Stored in order of upper byte (3rd byte) and lower byte (4th byte) | W | 0 |
| 15 | 0012 | | Stored in order of upper byte (5th byte) and lower byte (6th byte) | W | 0 |
| 16 | 0013 | | Stored in order of upper byte (7th byte) and lower byte (8th byte) | W | 0 |
| 17 | 0014 | | Stored in order of upper byte (9th byte) and lower byte (10th byte) | W | 0 |

| EtherNet/IP (Adapter) | Shared Memory | | | | |
|---|---|---|---|---|---|
| Address No. | Address No. | Description | Explanation | Attri-butes | Initial Value |
| 18 | 0015 | Name1 | Stored in order of upper byte (1st character) and lower byte (2nd character) | W | 0 |
| 19 | 0016 | | Stored in order of upper byte (3rd character) and lower byte (4th character) | W | 0 |
| 20 | 0017 | | Stored in order of upper byte (5th character) and lower byte (6th character) | W | 0 |
| 21 | 0018 | | Stored in order of upper byte (7th character) and lower byte (8th character) | W | 0 |
| 22 | 0019 | | Stored in order of upper byte (9th character) and lower byte (10th character) | W | 0 |
| 23 | 0020 | | Stored in order of upper byte (11th character) and lower byte (12th character) | W | 0 |
| 24 | 0021 | | Stored in order of upper byte (13th character) and lower byte (14th character) | W | 0 |
| 25 | 0022 | | Stored in order of upper byte (15th character) and lower byte (16th character) | W | 0 |
| 26 | 0023 | | Stored in order of upper byte (17th character) and lower byte (18th character) | W | 0 |
| 27 | 0024 | Name2 | Stored in order of upper byte (1st character) and lower byte (2nd character) | W | 0 |
| 28 | 0025 | | Stored in order of upper byte (3rd character) and lower byte (4th character) | W | 0 |
| 29 | 0026 | | Stored in order of upper byte (5th character) and lower byte (6th character) | W | 0 |
| 30 | 0027 | | Stored in order of upper byte (7th character) and lower byte (8th character) | W | 0 |
| 31 | 0028 | | Stored in order of upper byte (9th character) and lower byte (10th character) | W | 0 |
| 32 | 0029 | | Stored in order of upper byte (11th character) and lower byte (12th character) | W | 0 |
| 33 | 0030 | | Stored in order of upper byte (13th character) and lower byte (14th character) | W | 0 |
| 34 | 0031 | | Stored in order of upper byte (15th character) and lower byte (16th character) | W | 0 |
| 35 | 0032 | | Stored in order of upper byte (17th character) and lower byte (18th character) | W | 0 |

Do not write a value other than 0 to the address number with "Reserved" in the Contents.

## 2.3 EtherNet/IP adapter (Class 3/UCMM communication)

● Class 3/UCMM Communication Overview

Communication in which the target executes and responds to the service requested by the originator.
There are Class3 communication that opens the connection and UCMM communication that does not open.
The method to perform the service is to specify the CLassID, instancid and attributeids to request the assigned service to the target in the access method that corresponds to the serviceid.

- Get_Attribute_Single(0EH): Get target data using one Attribute in Instance
- Get_Attribute_All(01H): Get target data using all Attribute in Instance
- Set_Attribute_Single(10H): Use one Attribute in Instance to populate the target

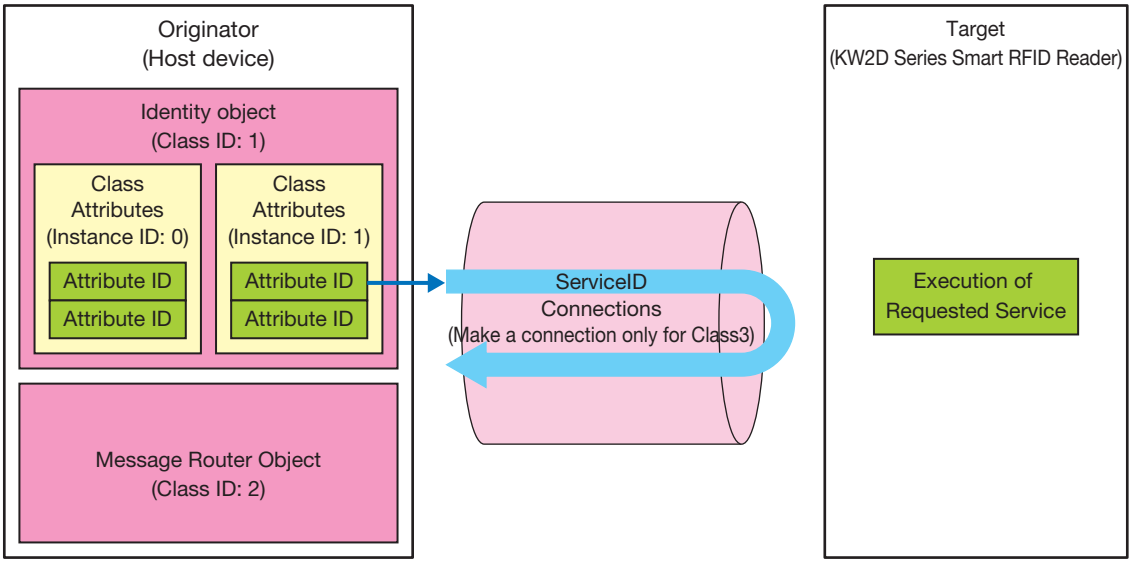

● Service List

Identity Object (Class ID: 01H)

An object that provides device identification, general information and reset service, etc. The reset service performs by soft reset.

■ **Class Attributes (Instance ID: 0)**

**Available ServiceID**

- Get_Attribute_Single(0EH)
- Get_Attribute_All(01H)

**AttributeID List**

R: Read

| ID | Attributes | Name | Data Type | Description | Value |
|---|---|---|---|---|---|
| 1 | R | Revision | UNIT | Object revisions | 1 |
| 2 | R | Max Instance | UNIT | Maximum instance number | 1 |
| 3 | R | Number of Instances | UNIT | Number of generated object instances | 1 |
| 6 | R | Maximum ID Number Class Attributes | UNIT | Maximum attribute ID number for class attributes | 7 |
| 7 | R | Maximum ID Number Instance Attributes | UNIT | Maximum attribute ID number of the instance attribute | 7 |

■ **Instance attribute (Instance ID: 1)**

**Available ServiceID**

- Get_Attribute_Single(0EH)
- Get_Attribute_All(01H)
- Reset(05H) *Not required for Attribute ID

**AttributeID List**

R: Read

| ID | Attributes | Name | Data Type | Description | Value |
|---|---|---|---|---|---|
| 1 | R | Vendor ID | UNIT | Vendor Identification Number | 159 |
| 2 | R | Device Type | UNIT | Common device types | 43 |
| 3 | R | Product Code | UNIT | Product Identification Code | 3000 |
| 4 | R | Revision | STRUCT of: | Identity object revision | - |
| | | Major Revision | UNIT | Major revisions | *1 |
| | | Minor Revision | UNIT | Minor Revisions | *1 |
| 5 | R | Status | UNIT | Current status of the device bit4 to 7<br>0010: Connection Timeout<br>0011: Connection disconnection<br>0110: One or more connections are in the RUN status<br>0111: All IDLE status during connection | Current Status |
| 6 | R | Serial Number | UNIT | Serial Number | - |
| 7 | R | Product Name | SHORT-STRING | Product Name | *2 |

*1 Stores the version of the system software. For example, for version 1.2.3, the major revision stores 1, the minor revision stores 2, and 3 does not.

*2 "KW2D-Rx100Q4E" is stored.

Message Router object (Class ID: 0x02)

An object to manage incoming messages.

- **Class Attributes (Instance ID: 0)**

**Available ServiceID**

• Get_Attribute_Single(0EH)

**AttributeID List**

R: Read

| ID | Attributes | Name | Data Type | Description | Value |
|---|---|---|---|---|---|
| 1 | R | Revision | UNIT | Object revisions | 1 |
| 2 | R | Max Instance | UNIT | Maximum instance number | 1 |
| 3 | R | Number of Instances | UNIT | Number of generated object instances | 1 |
| 6 | R | Maximum ID Number Class Attributes | UNIT | Maximum attribute ID number for class attributes | 7 |
| 7 | R | Maximum ID Number Instance Attributes | UNIT | Maximum attribute ID number of the instance attribute | 2 |

- **Instance attribute (Instance ID: 1)**

**Available ServiceID**

• Get_Attribute_Single(0EH)

**AttributeID List**

R: Read

| ID | Attributes | Name | Data Type | Description | Value |
|---|---|---|---|---|---|
| 1 | R | Object_list | STRUCT of: | List of objects | - |
| | | Number | UINT | The number of classes supported in the class array | 7 |
| | | Classes | The UINT array | List of class codes | 01H02H<br>04H06H<br>64H<br>F5HF6H |
| 2 | R | Number Available | UNIT | Maximum number of connections | 3 |

Assembly object (Class ID: 04H)

Cyclic communication data objects.

- **Class Attributes (Instance ID: 0)**

**Available ServiceID**

• Get_Attribute_Single(0EH)

**AttributeID List**

R: Read

| ID | Attributes | Name | Data Type | Description | Value |
|---|---|---|---|---|---|
| 1 | R | Revision | UNIT | Object revisions | 2 |

- **Instance attributes (Instance ID: 100, 200)**

**Available ServiceID**

• Get_Attribute_Single(0EH)

• Set_Attribute_Single(10H)

**AttributeID List**

R: Read, R/W: Read and Write

| ID | Attributes | Name | Data Type | Description | Value |
|---|---|---|---|---|---|
| 3 | R/W | Data | BYTE Array | Cyclic communication data assigned to InstanceID | Cyclic communication data |
| 4 | R | Size | UNIT | Cyclic communication data size allocated to InstanceID | Cyclic communication data size |

Connection Manager object (Class ID: 06H)

An object used for connection-type communication. Used to open a connection to the device.

- **Class Attributes**

There is no class attribution

- **Instance attribute (Instance ID: 1)**

There is no class attribution

**Available ServiceID**

• Forward_Open(54H)

• Forward_Close(4EH)

TCP/IP Interface Object (Class ID: F5H)

An object that provides a mechanism to set up a TCP/IP network interface.

### Class Attributes (Instance ID: 0)

**Available ServiceID**

- Get_Attribute_Single(0EH)

**AttributeID List**

R: Read

| ID | Attributes | Name | Data Type | Description | Value |
|---|---|---|---|---|---|
| 1 | R | Revision | UNIT | Object revisions | 1 |
| 2 | R | Max Instance | UNIT | Maximum instance number | 1 |
| 3 | R | Number of Instances | UNIT | Number of generated object instances | 1 |
| 6 | R | Maximum ID Number Class Attributes | UNIT | Maximum attribute ID number for class attributes | 7 |
| 7 | R | Maximum ID Number Instance Attributes | UNIT | Maximum attribute ID number of the instance attribute | 13 |

### Instance attribute (Instance ID: 1)

**Available ServiceID**

- Get_Attribute_Single(0EH)
- Set_Attribute_Single(10H)*1

**AttributeID List**

R: Read, R/W: Read and Write

| ID | Attributes | Name | Data Type | Description | Value |
|---|---|---|---|---|---|
| 1 | R | Status | DWORD | Interface Status<br>0: Communication information not set<br>1: Communication information has been set (nonvolatile memory)<br>2: Communication information has been set (hardware setting) | 2 |
| 2 | R | Configuration Capability | DWORD | Interface function flags<br>bit2: With or without DHCP function (No: 0)<br>bit4: Setting value can be changed or not (enabled: 0)<br>bit5: Hardware settings such as IP address (enabled: 1)<br>bit6:Reset after change or not (No: 0) | 32(0020H) |
| 3 | R | Configuration Control | DWORD | Interface control flag<br>0x0000: use the previous IP address value | 0 |
| 4 | R | Physical Link Object | STRUCT of: | Path to physical layer link object<br>20F6=Ethernet Link object<br>2401=Instance 1 | - |
| | | Path size | UINT | Path size (WORD) | 2 |
| | | Path | Padded EPATH | Segments to identify physical layer link objects | 20F62401H |
| 5 | R | Interface Configuration | STRUCT of: | TCP/IP Network Interface Settings | - |
| | | IP Address | UDINT | IP address of the device | Current IP address |
| | | Network Mask | UDINT | Device Network Mask | Current Sub Net Mask |
| | | Gateway Address | UDINT | Default Gateway Address | Current Gateway |
| | | Name Server | UDINT | The primary name server | 0 (not set) |
| | | Name Server 2 | UDINT | Secondary name servers | 0 (not set) |
| | | Domain Name | STRING | Domain name ASCII string: 48 characters max | 0 (not set) |
| 6 | R | Host Name | STRING | Host Name | 0 (not set) |
| 13 | R/W | Encapsulation Inactivity Timeout | UINT | encapsulation session timeout time<br>(1 to 3600 seconds, default: 120 seconds) | Timeout value |

*1 Attributes are R/W only

Ethernet Link object (Class ID: F6H)

An object that provides Ethernet status information.

## Class Attributes (Instance ID: 0)

**Available ServiceID**

- Get_Attribute_Single(0EH)

**AttributeID List**

R: Read

| ID | Attributes | Name | Data Type | Description | Value |
|---|---|---|---|---|---|
| 1 | R | Revision | UNIT | Object revisions | 4 |
| 2 | R | Max Instance | UNIT | Maximum instance number | 1 |
| 3 | R | Number of Instances | UNIT | Number of generated object instances | 1 |

## Instance attribute (Instance ID: 1)

**Available ServiceID**

- Get_Attribute_Single(0EH)
- Get_Attribute_All(01H)

**AttributeID List**

R: Read

| ID | Attributes | Name | Data Type | Description | Value |
|---|---|---|---|---|---|
| 1 | R | Interface Speed | UDINT | Interface communication speed (Mbps) | 100 |
| 2 | R | Interface Flags | DWORD | Interface status flag<br>Full-duplex: 15<br>Half-duplex:13<br>Acquisition failure: 5 | 15 |
| 3 | R | Physical Address | ARRAY of 6 USINTs | MAC layer address | MAC address value |
| 11 | R | Interface Capability | STRUCT of: | Interface function | - |
| | | Capability Bits | DWORD | bit0: Reset after change or not (No: 0)<br>bit1: Auto-negotiate function (Yes: 1)<br>bit2: Auto-MDIX function (Yes: 1)<br>bit3: Set value can be changed or not (No: 0) | 6 |
| | | Speed/Duplex Options | STRUCT of: | | - |
| | | Speed/Duplex Array Count | USINT | Number of Speed/Duplex Array arrays | 1 |
| | | Speed/Duplex Array | ARRY of STRUCT of: | | - |
| | | Interface Speed | UINT | Interface communication speed (Mbps) | 100 |
| | | Interface Duplex Mode | USINT | 0: Half-duplex, 1: Full-duplex | 1 |

RFID object (Class ID: 64H)

An object that provides KW2D information.

## Class Attributes (Instance ID: 0)

**Available ServiceID**

• Get_Attribute_Single(0EH)

**AttributeID List**

R: Read

| ID | Attributes | Name | Data Type | Description | Value |
|---|---|---|---|---|---|
| 1 | R | RFID_ERR | USINT | KW2D Series Smart RFID Reader error information<br>If an error occurs, the following bits will turn ON.<br>bit0: Reservation<br>bit1: No RFID setting<br>bit2: Tag list not registered<br>bit3: Host communication error<br>bit4 to 15: Reserved | - |

## Instance attribute

There is no instance attribution.

# 3 CC-Link IE Field Basic Communication (Slave station)

## 3.1 Overview

The KW2D Series Smart RFID Reader supports CC-Link IE Field Basic communication (slave station).
KW2D Series Smart RFID reader works as a slave station in CC-Link Field Basic communication and communication can be performed with CC-Link Field Basic devices such as programmable displays or PLCs.

● Communication Specifications

| Items | | Specifications |
|---|---|---|
| Supported protocols | | CC-Link IE Field Basic (Slave station) |
| Supported ports | | Ethernet port |
| Action | | Slave station |
| Port number | | 61450 (for cyclic transmission), 61451 (for device detection) |
| Number of connections | | 1 (number of occupied stations: 1) |
| Send wait time | | 0 to 255ms (default 0ms)*1 |
| Cyclic data (1 station) | RX | 64 bits |
| | RWr | 32 words |
| | RY | 64 bits |
| | RWw | 32 words |

● CC-Link IE Field Basic Communication Shared Memory

CC-Link IE Field Basic shared memory for communication is a memory that can be accessed by CC-Link IE Field Basic master.
When **CC-Link IE Field Basic Slave** is selected in **Communication Mode** of **Connection Settings** on **RFID Reader Settings** tab, the shared memory of the KW2D Smart RFID Reader is read or written via CC-Link IE Field Basic Slave shared memory. For the assignment of the shared memory, refer to "Cyclic Transmission Overview" on page 4-34.

When the power is turned on or reset, the initial value is set in the shared memory.

*1 Can be changed with the KW RFID Configurator

## 3.2 CC-Link IE Field Basic (Slave Station)

The KW2D Series Smart RFID Reader acts as a slave station of CC-Link IE Field Basic and performs the cyclic transmission with the master station.

● Cyclic Transmission Overview

CC link IE field basic devices read and write data periodically. In order to read/write data, specify Rx/RWr/RY/RWw associated to the target data.

**Cyclic communication image**

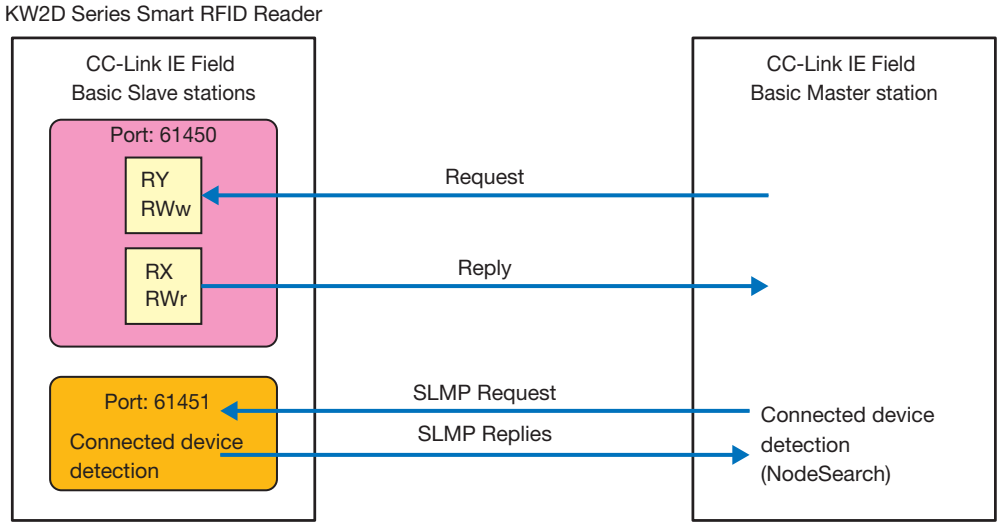

● Memory allocation for cyclic transmission

The host device reads and writes the shared memory of the KW2D Smart RFID Reader via the link devices RX, RWr, RY, and RWw.

The correspondence between the shared memory for CC-Link IE Field Basic communication and the shared memory of the KW2D Smart RFID Reader is as follows.

### ■ Link device RX (0 to 3F)

The host device can read the value of the input relay of the KW2D Smart RFID Reader via RX of the CC-Link IE Field Basic slave station.

R: Read

| CC-Link IE Field Basic (Slave station) | Shared Memory | | | | |
|---|---|---|---|---|---|
| **Address No.** | **Address No.** | **Description** | **Explanation** | **Attri-butes** | **Initial Value** |
| 0 | 0001*1 | Verification result | When the tag list is registered to the KW2D Smart RFID Reader and the UID verification result is a match, the value is 1. | R | 0 |
| 1 | 0002*1 | | When the tag list is registered to the KW2D Smart RFID Reader and the UID verification result is mismatch, the value is 1. | R | 0 |
| 2 | 0003 | Host communication status | Indicates the communication status of the Host communication.<br>0: Communicating, 1: Not communicating | R | 0 |
| 3 | 0004 | Project status | Indicates whether the KW2D Series Smart RFID Reader has a project.<br>0: Has a project, 1: No project | R | 0 |
| 4 | 0005 | Tag list status | Indicates whether or not the tag list is registered in the KW2D Smart RFID Reader.<br>0: Registered, 1: No registration | R | 0 |
| 5, 6 | 0006, 0007 | Reserved | - | R | - |
| 7 | 0008 | Operation mode | You can check the operation mode of the KW2D Smart RFID Reader.<br>0: Running, 1: Stopped | R | 0 |
| 8 | 0009*1 | Authority D1 | Indicates the authority information of the detected RFID tag.<br>1 to 255: Authority<br>However, the content varies based on whether or not the tag list is registered.<br>With tag list registration: The UID is verified against the tag list. If OK, the authority registered in the tag list is read. For a KW2D special tag, if authority 1 to 254 is specified in the tag list, the authority registered in the tag list is read. If 255 is specified in the tag list, the authority added to the tag is read.<br>No tag list registration: For a KW2D special tag, the authority held in the tag is read. For other tags, 0 is read. | R | 0 |
| 9 | 0010*1 | Authority D2 | | R | 0 |
| A | 0011*1 | Authority D3 | | R | 0 |
| B | 0012*1 | Authority D4 | | R | 0 |
| C | 0013*1 | Authority D5 | | R | 0 |
| D | 0014*1 | Authority D6 | | R | 0 |
| E | 0015*1 | Authority D7 | | R | 0 |
| F | 0016*1 | Authority D8 | | R | 0 |
| 10 | 0017*1 | KW2D special tag detection | 0: KW2D special tag not detected, 1: KW2D Series special tag detected | R | 0 |
| 11 | 0018 | Reserved | - | R | - |

*1 After reading the RFID tag, the tag information is retained for up to three seconds. After that, it is set to the initial value.

| CC-Link IE Field Basic (Slave station) | Shared Memory | | | | |
|---|---|---|---|---|---|
| **Address No.** | **Address No.** | **Description** | **Explanation** | **Attri-butes** | **Initial Value** |
| 12 | 0019*1 | Command execution status | 0: Waiting for command, 1: Executing command (holds for up to two seconds then returns to 0. When the value of the holding register 0008 is set to 0, this value is also set to 0.) | R | 0 |
| 13 | 0020 | Command execution error | 0: Normal, 1: Execution error (holds for up to two seconds then returns to 0. When the value of the holding register 0008 is set to 0, this value is also set to 0.) | R | 0 |
| 14 | 0021 | Editing status of tag information | The value is 1 during registration. | R | 0 |
| 15 | 0022 | | The value is 1 during deletion. | R | 0 |
| 16 to 3F | 0023 to 0064 | Reserved | - | R | - |

An undefined value is stored in the address number with "Reserved" in the Contents.

*1 After reading the RFID tag, the tag information is retained for up to three seconds. After that, it is set to the initial value.

## Link device RWr (0 to 1F)

The host device can read the value of the input register of the KW2D Smart RFID Reader via RWr of the CC-Link IE Field Basic slave station.

R: Read

| CC-Link IE Field Basic (Slave station) | Shared Memory | | | | | |
|---|---|---|---|---|---|---|
| **Address No.** | **Address No.** | **Description** | | **Explanation** | **Attri-butes** | **Initial Value** |
| 0 | 0001 | Reserved | | - | R | - |
| 1 | 0002 | Tag information*1 | Status, Verification result or Authority | 65535: Reading RFID tag<br>Other than reading RFID tag, the status is as follows.<br>Upper byte: Status of KW2D Smart RFID Reader<br>00h: Operation mode (running)<br>01h: Tag edit mode (registering)<br>02h: Tag edit mode (deleting)<br>Lower byte: Verification result or Authority<br>0: Not match, 1 to 255: Authority<br>However, the content varies based on whether or not the tag list is registered.<br>With tag list registration: The UID is verified with the tag list. If OK, the authority registered in the tag list is stored. For a KW2D special tag, if authority 1 to 254 is specified in the tag list, the authority registered in the tag list is stored. If 255 is specified in the tag list, the authority assigned to the special tag is stored.<br>No tag list registration: For a KW2D special tag, the authority assigned to the special tag is stored. For other tags, 0 is stored. | R | 65535 |
| 2 | 0003 | | UID data length | 0: UID not stored, 1 to 10: Number of bytes | R | 0 |
| 3 | 0004 | | UID | Stored in order of upper byte (1st byte) and lower byte (2nd byte) | R | 0 |
| 4 | 0005 | | | Stored in order of upper byte (3rd byte) and lower byte (4th byte) | R | 0 |
| 5 | 0006 | | | Stored in order of upper byte (5th byte) and lower byte (6th byte) | R | 0 |
| 6 | 0007 | | | Stored in order of upper byte (7th byte) and lower byte (8th byte) | R | 0 |
| 7 | 0008 | | | Stored in order of upper byte (9th byte) and lower byte (10th byte) | R | 0 |
| 8 to A | 0009 to 0011 | | Reserved | - | R | - |

*1 After reading the RFID tag, the tag information is retained for up to three seconds. After that, it is set to the initial value.

| CC-Link IE Field Basic (Slave station) | Shared Memory | | | | | |
|---|---|---|---|---|---|---|
| **Address No.** | **Address No.** | **Description** | | **Explanation** | **Attri-butes** | **Initial Value** |
| B | 0012 | Tag information*1 | Name1 | Stored in order of upper byte (1st character) and lower byte (2nd character) | R | 0 |
| C | 0013 | | | Stored in order of upper byte (3rd character) and lower byte (4th character) | R | 0 |
| D | 0014 | | | Stored in order of upper byte (5th character) and lower byte (6th character) | R | 0 |
| E | 0015 | | | Stored in order of upper byte (7th character) and lower byte (8th character) | R | 0 |
| F | 0016 | | | Stored in order of upper byte (9th character) and lower byte (10th character) | R | 0 |
| 10 | 0017 | | | Stored in order of upper byte (11th character) and lower byte (12th character) | R | 0 |
| 11 | 0018 | | | Stored in order of upper byte (13th character) and lower byte (14th character) | R | 0 |
| 12 | 0019 | | | Stored in order of upper byte (15th character) and lower byte (16th character) | R | 0 |
| 13 | 0020 | | | Stored in order of upper byte (17th character) and lower byte (18th character) | R | 0 |
| 14 | 0021 | | Reserved | - | R | - |
| 15 | 0022 | | Name2 | Stored in order of upper byte (1st character) and lower byte (2nd character) | R | 0 |
| 16 | 0023 | | | Stored in order of upper byte (3rd character) and lower byte (4th character) | R | 0 |
| 17 | 0024 | | | Stored in order of upper byte (5th character) and lower byte (6th character) | R | 0 |
| 18 | 0025 | | | Stored in order of upper byte (7th character) and lower byte (8th character) | R | 0 |
| 19 | 0026 | | | Stored in order of upper byte (9th character) and lower byte (10th character) | R | 0 |
| 1A | 0027 | | | Stored in order of upper byte (11th character) and lower byte (12th character) | R | 0 |
| 1B | 0028 | | | Stored in order of upper byte (13th character) and lower byte (14th character) | R | 0 |
| 1C | 0029 | | | Stored in order of upper byte (15th character) and lower byte (16th character) | R | 0 |
| 1D | 0030 | | | Stored in order of upper byte (17th character) and lower byte (18th character) | R | 0 |
| 1E | 0031*2 | | Number of detections | Stores the number of RFID tag detections. | R | 0 |
| 1F | 0032 | Lock operation time (current value) | | Stores the lock operation time during downcounting. | R | 0 |

An undefined value is stored in the address number with "Reserved" in the Contents.

*1 After reading the RFID tag, the tag information is retained for up to three seconds. After that, it is set to the initial value.
*2 The input register 0031 (number of detections) counts up for each tag detection. Since the tag information value is updated at the same time as the count is increased, the memory update timing can be grasped by monitoring the change in the number of detections.

### Link device RY (0 to 3F)

The host device can write the value to the coil relay of the KW2D Smart RFID Reader via RY of the CC-Link IE Field Basic slave station.

W: Write

| CC-Link IE Field Basic (Slave station) | Shared Memory | | | | |
|---|---|---|---|---|---|
| **Address No.** | **Address No.** | **Description** | **Explanation** | **Attri-butes** | **Initial Value** |
| 0 | 0001 | Switching operation mode | Switches the operation mode of the KW2D Smart RFID Reader.<br>0: to Running, 1: to Stopped | W | 0 |
| 1 | 0002 | Releasing lock operation | When the value changes to 1, the lock operation is released. | W | 0 |
| 2 | 0003 | Pausing lock operation timer | When the value changes to 1, counting the lock operation time is paused. | W | 0 |
| 3 to 5 | 0004 to 0006 | Reserved | - | W | - |
| 6 | 0007 | Verification result on host device | When the verification result of the tag information is "OK command", the host device writes 1. | W | 0 |
| 7 | 0008 | | When the verification result of the tag information is "Failure command", the host device writes 1. | W | 0 |
| 8 | 0009 | Manual control of buzzer | Enables or disables the manual operation of the buzzer.<br>0: Disable, 1: Enable | W | 0 |
| 9 | 0010 | Ring or stop the buzzer | Operate the buzzer.<br>0: Stop, 1: Ring | W | 0 |
| A | 0011 | Manual control of the LEDs (red) | Enables or disables the manual operation of the LEDs(red).<br>0: Disable, 1: Enable | W | 0 |
| B | 0012 | Turn on or off the LEDs (red) | Operate the LEDs (red).<br>0: Turn off, 1: Turn on | W | 0 |
| C | 0013 | Manual control of the LEDs (white) | Enables or disables the manual operation of the LEDs (white).<br>0: Disable, 1: Enable | W | 0 |
| D | 0014 | Turn on or off the LEDs (white) | Operate the LEDs (white).<br>0: Turn off, 1: Turn on | W | 0 |
| E | 0015 | Manual control of the LEDs (green) | Enables or disables the manual operation of the LEDs (green).<br>0: Disable, 1: Enable | W | 0 |
| F | 0016 | Turn on or off the LEDs (green) | Operate the LEDs (green).<br>0: Turn off, 1: Turn on | W | 0 |
| 10 to 3F | 0017 to 0064 | Reserved | - | W | - |

Do not write a value other than 0 to the address number with "Reserved" in the Contents.

### Link device RWw (0 to 1F)

The host device can write the value to the holding register of the KW2D Smart RFID Reader via RWw of the CC-Link IE Field Basic slave station.

W: Write

| CC-Link IE Field Basic (Slave station) | Shared Memory | | | | |
|---|---|---|---|---|---|
| **Address No.** | **Address No.** | **Description** | **Explanation** | **Attri-butes** | **Initial Value** |
| 0 to 6 | 0001 to 0007 | Reserved | - | W | - |
| 7 | 0008 | Command Authority | Upper byte: Specify the command to be executed with the following values.<br>00h: Clear command<br>To execute the same command continuously, set 00h between commands.<br>01h: Registration<br>Shifts to "tag edit mode (registering)". The authority set in the lower byte of the holding register 0008 will be the default.<br>02h: Delete<br>Shifts to "tag edit mode (deleting)".<br>04h: Cancel<br>Discards the contents registered or deleted while the "tag edit mode" and returns to the "operation mode".<br>08h: Exit<br>When any changes have been made to the tag list, the changes are reflected in the tag list of the KW2D Smart RFID Reader, and the KW2D Smart RFID Reader restarts.<br>When there are no changes in the tag list, it returns to the "operation mode".<br>10h: Update<br>When the KW2D Smart RFID Reader is in the "tag edit mode (registering)", the contents of holding registers 0008 to 0032 are reflected in the tag list of the KW2D Smart RFID Reader.<br>Lower byte: Specify the authority (1 to 255) for the UID. However, 0 is treated as 255. | W | 0 |
| 8 | 0009 | UID data length | 0: UID not stored, 1 to 10: Number of bytes | W | 0 |
| 9 | 0010 | UID | Stored in order of upper byte (1st byte) and lower byte (2nd byte) | W | 0 |
| A | 0011 | | Stored in order of upper byte (3rd byte) and lower byte (4th byte) | W | 0 |
| B | 0012 | | Stored in order of upper byte (5th byte) and lower byte (6th byte) | W | 0 |
| C | 0013 | | Stored in order of upper byte (7th byte) and lower byte (8th byte) | W | 0 |
| D | 0014 | | Stored in order of upper byte (9th byte) and lower byte (10th byte) | W | 0 |

| CC-Link IE Field Basic (Slave station) | Shared Memory | | | | |
|---|---|---|---|---|---|
| **Address No.** | **Address No.** | **Description** | **Explanation** | **Attri-butes** | **Initial Value** |
| E | 0015 | Name1 | Stored in order of upper byte (1st character) and lower byte (2nd character) | W | 0 |
| F | 0016 | | Stored in order of upper byte (3rd character) and lower byte (4th character) | W | 0 |
| 10 | 0017 | | Stored in order of upper byte (5th character) and lower byte (6th character) | W | 0 |
| 11 | 0018 | | Stored in order of upper byte (7th character) and lower byte (8th character) | W | 0 |
| 12 | 0019 | | Stored in order of upper byte (9th character) and lower byte (10th character) | W | 0 |
| 13 | 0020 | | Stored in order of upper byte (11th character) and lower byte (12th character) | W | 0 |
| 14 | 0021 | | Stored in order of upper byte (13th character) and lower byte (14th character) | W | 0 |
| 15 | 0022 | | Stored in order of upper byte (15th character) and lower byte (16th character) | W | 0 |
| 16 | 0023 | | Stored in order of upper byte (17th character) and lower byte (18th character) | W | 0 |
| 17 | 0024 | Name2 | Stored in order of upper byte (1st character) and lower byte (2nd character) | W | 0 |
| 18 | 0025 | | Stored in order of upper byte (3rd character) and lower byte (4th character) | W | 0 |
| 19 | 0026 | | Stored in order of upper byte (5th character) and lower byte (6th character) | W | 0 |
| 1A | 0027 | | Stored in order of upper byte (7th character) and lower byte (8th character) | W | 0 |
| 1B | 0028 | | Stored in order of upper byte (9th character) and lower byte (10th character) | W | 0 |
| 1C | 0029 | | Stored in order of upper byte (11th character) and lower byte (12th character) | W | 0 |
| 1D | 0030 | | Stored in order of upper byte (13th character) and lower byte (14th character) | W | 0 |
| 1E | 0031 | | Stored in order of upper byte (15th character) and lower byte (16th character) | W | 0 |
| 1F | 0032 | | Stored in order of upper byte (17th character) and lower byte (18th character) | W | 0 |

Do not write a value other than 0 to the address number with "Reserved" in the Contents.

# 4 Event Transmission (TCP, UDP)

## 4.1 Overview

The KW2D Smart RFID Reader supports event transmission (TCP) and event transmission (UDP). Hereafter, if there is no difference between event transmission (TCP) and event transmission (UDP), it is simply called the event transmission.
When an RFID tag is detected, the event transmission sends the detected RFID tag data to the host device in the specified format.
For the event transmission (TCP), the KW2D smart RFID reader acts as a client and performs TCP communication with the host device of the server. The connection with the TCP server is established when the event transmission is executed, but whether to release or maintain the connection can be selected in the option settings.
The event transmission (UDP) performs the UDP communication with the host device without a connection.

● Communication Specifications

| Items | Specifications | |
|---|---|---|
| Supported protocol | Event transmission (TCP) | Event transmission (UDP) |
| Supported port | Ethernet port | Ethernet port |
| Action | TCP client | UDP |
| Destination IP address | ###.***.***.***<br>(###: 1 to 126, 128 to 223, ***: 0 to 255) | ###.***.***.***<br>(###: 1 to 126, 128 to 223, ***: 0 to 255) |
| Destination port number | 1 to 65535 | 1 to 65535 |

● Format of Transmission data

The format for sending the detected RFID tag data is as follows.

| Header<br>(0 to 4 bytes) | Data fields<br>(67 bytes) | BCC<br>(2 bytes) | Terminator<br>(0 to 4 bytes) |
|---|---|---|---|

The data fields and the value of BCC are sent in ASCII code.

The structure of the data fileds (67 bytes) is as follows.

| Data storage location | Number of bytes | Contents | Description |
|---|---|---|---|
| 1 | 1 | Sequence number | 0 (30h) to 9 (39h), A (41h) to 5 (46h)<br>Send a number different from the previous number sent. |
| 2 | 1 | Verification result | 0 (30h): NG<br>1 (31h): OK<br>2 (32h): No tag list |
| 3 | 1 | Status | 0 (30h): Operation mode (running)<br>1 (31h): Tag edit mode (registering)<br>2 (32h): Tag edit mode (deleting) |
| 4 | 1 | Reserved | 0 (30h) |
| 5 | 1 | KW2D special tag detection | 0 (30h): KW2D special tag not detected<br>1 (31h): KW2D special tag detected |
| 6, 7 | 2 | Authority | Converts the authority 00 to FF (0 to 255) to ASCII code and stores it.<br>Example: Authority is 123 (Dec).<br>Authority: 123=7Bh<br>7 (37h) \| B (42h) |
| 8 | 1 | Space | Stores the character string " " (20h). |
| 9 to 28 | 20 | UID | The UID is stored in ASCII code from the first digit. NULL (00h) is stored after the last digit of the UID.<br>Example: 8-digit UID with the value of input register 0004 being 1234h and 0005 being 5678h.<br>Input register 0004=1234h \| Input register 0005=5678h<br>1 (31h) \| 2 (32h) \| 3 (33h) \| 4 (34h) \| 5 (35h) \| 6 (36h) \| 7 (37h) \| 8 (38h) \| NULL (00h) \| … \| NULL (00h)<br>9th bype … 20th byte |
| 29 | 1 | Space | Stores the character string " " (20h). |
| 30 to 47 | 18 | Name1 | The character codes of Name1 are stored with no conversion. NULL (00h) is stored after the termination character.<br>Example: Name1 is "IDEC".<br>Name1: IDEC<br>I (49h) \| D (44h) \| E (45h) \| C (43h) \| NULL (00h) \| NULL (00h) \| … \| NULL (00h)<br>Termination Character … 18th byte |
| 48 | 1 | Space | Stores the character string " " (20h). |
| 49 to 66 | 18 | Name2 | The character codes of Name2 are stored with no conversion. NULL (00h) is stored after the termination character.<br>Example: Name2 is "KW2D".<br>Name2: KW2D<br>K (4Bh) \| W (57h) \| 2 (32h) \| D (44h) \| NULL (00h) \| NULL (00h) \| … \| NULL (00h)<br>Termination Character … 18th byte |
| 67 | 1 | Space | Stores the character string " " (20h). |

The byte data from the first code to the last code of the data fields (until BCC) are XORed, and the calculation result is converted to ASCII code and stored as BCC in 2 bytes.

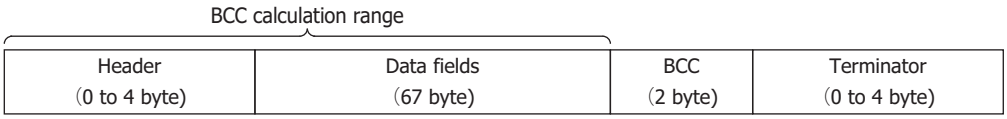


Example: The data to be calculated for BCC is as follows:

| | | | | | |
|---|---|---|---|---|---|
| A (41h) | B (42h) | C (43h) | ... | 9 (39h) | 0 (30h) |

The calculation result is as follows.
BCC result = 41h V 42h V 43h V ... V 39h V 30h = 41h

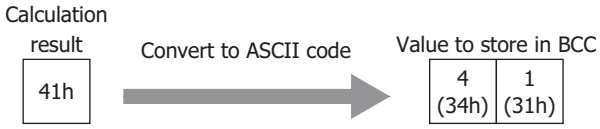

# 5 Maintenance Communication (Server)

Maintenance communication server is the communication mode for communicating with the KW RFID Configurator. A maximum of two maintenance communication server ports can be used.
The following functions can be executed using the KW RFID Configurator.

- Read/write KW2D Series Smart RFID Reader settings and tag list
- Read UIDs detected by the KW2D Series Smart RFID Reader and monitor status
- Find KW2D Series Smart RFID Readers
- Update KW2D Series Smart RFID Reader System Software

System Configuration Image

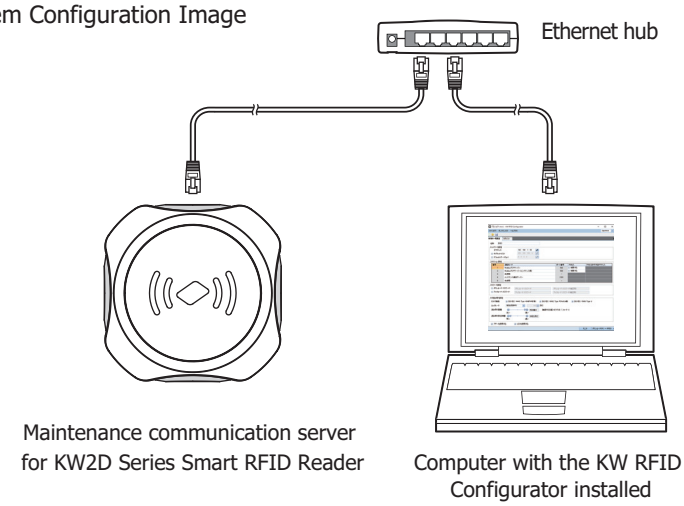


## 5.1 Communication Specifications

| Item | Specifications |
|---|---|
| Supported protocol | Maintenance communication server |
| Maximum number of simultaneous clients | 1 client per port |
| Port No. | 2101 and 2102 |
| Allow access by IP address | None |
| Function | • Download and Upload project<br>• Download tag list only<br>• Monitor UIDs detected by the KW2D Series Smart RFID Reader<br>• Find KW2D Series Smart RFID Readers<br>• Update KW2D Series Smart RFID Reader System Software |

## 5.2 Functions

● Download and Upload project

You can download the project created by KW RFID Configurator to the KW2D Smart RFID Reader and upload the project from the KW2D Smart RFID Reader. The project in the KW2D Smart RFID Reader can be protected with download and upload passwords.

- Downloading a Project (☞page 6-18)
- Uploading a Project (☞page 6-22)

● Download tag list only

Only the tag list can be downloaded to the KW2D Smart RFID Reader. For details, refer to Chapter 6 "Download only the tag list of the project" on page 6-21.

● Monitor UID Information Detected by KW2D Series Smart RFID Reader

You can monitor the tag information detected by a KW2D Series Smart RFID Reader. You can also add the monitored UID information to the tag list. For details, refer to Chapter 6 "RFID Reader List Dialog Box" on page 6-20.

● Search KW2D Series Smart RFID Readers

The search function of KW RFID Configurator can detect the IP addresses of KW2D Series Smart RFID Readers. For details, refer to Chapter 6 "RFID Reader List Dialog Box" on page 6-20.

● Update KW2D Series Smart RFID Reader System Software

You can update the System Software on a KW2D Series Smart RFID Reader. Always using the KW2D Series Smart RFID Reader with the latest System Software is recommended. For details, refer to Chapter 6 "RFID Reader List Dialog Box" on page 6-20.

# Chapter 5 Functions and Settings

This chapter describes the operations and functions of the KW2D Series Smart RFID Reader.
The operation of the KW2D Series Smart RFID Reader can be checked with the buzzer and LED indicators. However, the behavior of the buzzer and LED indicators depends on the status of the KW2D Series Smart RFID Reader and the settings in KW RFID Configurator.

## 1 KW2D Series Smart RFID Reader Statuses and Operations

**KW2D Series Smart RFID Reader Statuses and Operations**

| Status | Operation |
|---|---|
| Operation mode | At power on, At reset, stopped, running |
| Detection mode | Detecting RFID tag, Verifying RFID tag, Holding the detection result |
| Lock mode | During lock operation, At unlock operation |
| Tag edit mode | Registering, Deleting |

### 1.1 Operation Mode

The buzzer sound, LED display, and the status of the KW2D Smart RFID Reader in the operation mode are as follows.

● At power on and At reset

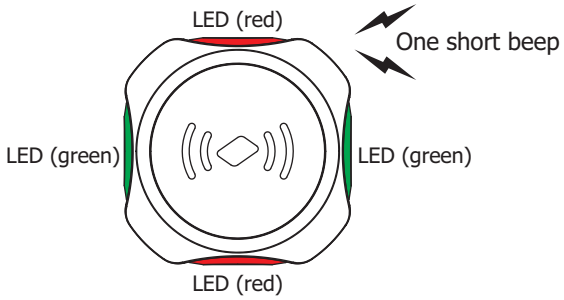


| Buzzer | LED | Status |
|---|---|---|
| One short beep | The LEDs (green) and the LEDs (red) are ON. (2 s) | KW2D Series Smart RFID Reader is performing initialization processing |

● Running

RFID tag reading is executed periodically according to **IC Tag Standard** specified on the **RFID Reader Settings** tab in the KW RFID Configurator.

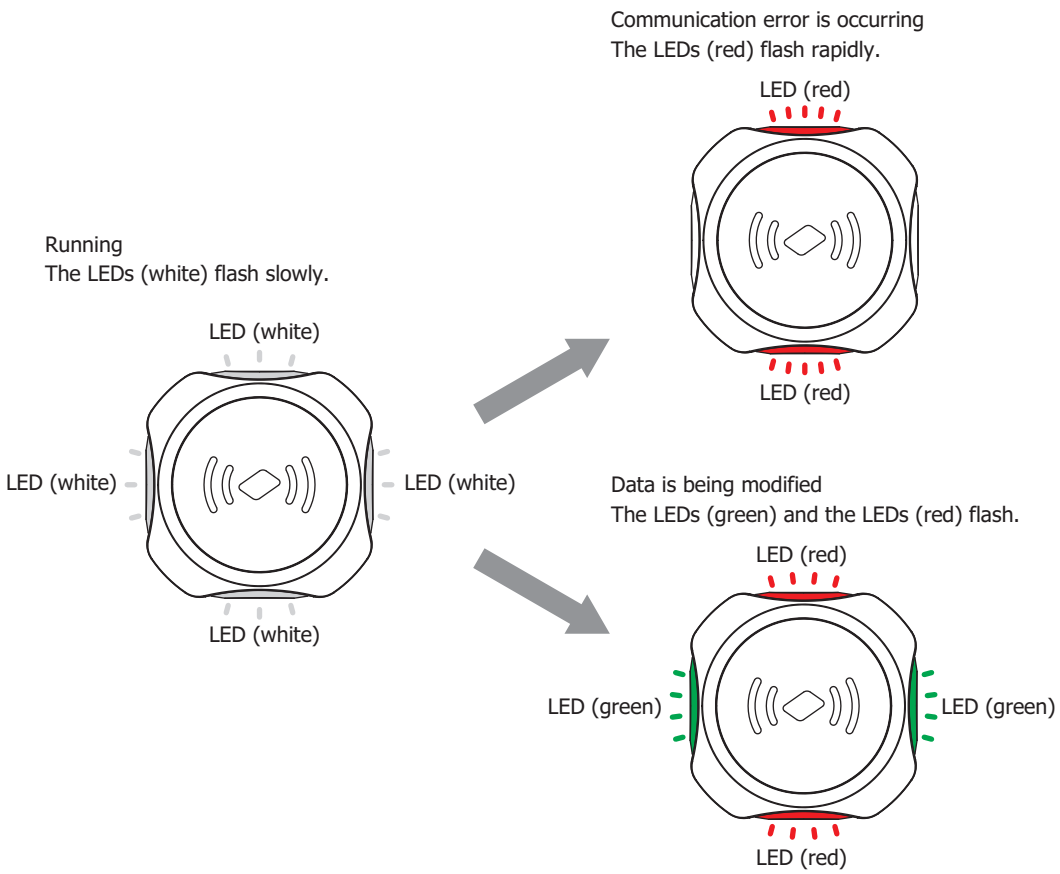


| Buzzer | LED | Status |
|---|---|---|
| None | The LEDs (white) flash slowly. (1 s interval) | Running<br>Waiting to read RFID tag. |
| None | The LEDs (red) flash rapidly. (100 ms interval) | Communication error is occurring<br>Host communication is interrupted for more than 10 seconds. |
| None | The LEDs (green) and the LEDs (red) flash. (500 ms interval) | Data is being modified<br>Downloading system software or project. |

- RFID tags cannot be detected while data is being modified.
- When you download the system software or project, the KW2D smart RFID reader restarts after a reset.
- When the **Turn off during running** is enabled, the LED (white) turns off during operation. For details, refer to Chapter 6 "LED" on page 6-13.

● Stopped

| Buzzer | LED | Status |
|---|---|---|
| None | OFF | RFID tag detection process is stopped. |

By changing the value of the coil relay, the KW2D Smart RFID Reader can be set to "Operation mode (stopped)". For details, refer to "Stop the KW2D Smart RFID Reader" on page 5-18.

## 1.2 Detection Mode

The buzzer sound, LED display, and the status of the KW2D Smart RFID Reader in the detection mode are as follows.

● Detecting an RFID tag

When an RFID tag at the distance set in Reading Distance under the **Tag Read Settings** on the **RFID Reader Settings** tab is detected, the KW2D Smart RFID Reader waits for the tag information of the detected tag to be read.

**KEYFOB type**

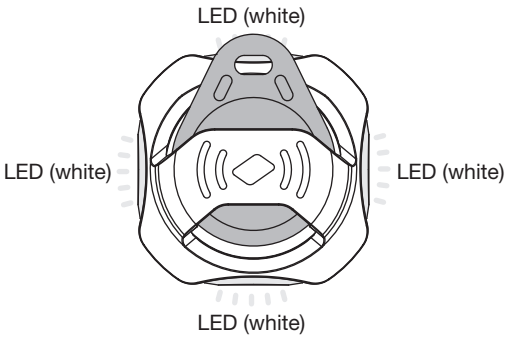


**Card type**

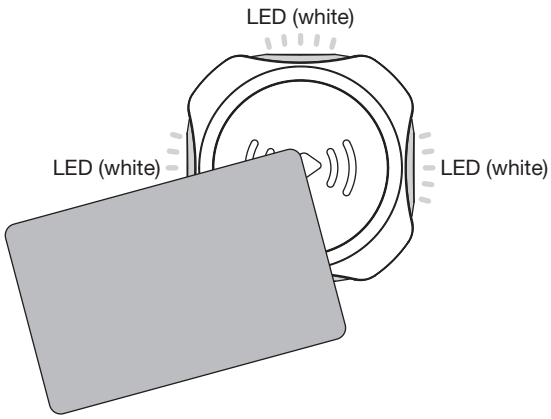


| Buzzer | LED | Status |
|---|---|---|
| None | The LEDs (white) are ON. | Detects RFID tag and waits for tag information to be read. |

- RFID tags are not detected if two or more tags are held up to the RFID reader.
- The above card type illustration is an example of the LED indicators at the time of detection, and does not explain or guarantee the detection position of the RFID tag.

The time required to complete reading the tag information of the detected RFID tag can be set in Reading Distance and Reading Time under the **Tag Read Settings** on the **RFID Reader Settings** tab. For details, refer to "1.4 Adjusting the RFID Tag Detection Sensitivity" on page 5-10.

● RFID tag verification is in progress

The tag information read from the detected RFID tag is being processed. The processing after the reading is completed varies based on whether or not the tag list is registered in the KW2D Smart RFID Reader.

**KEYFOB type**

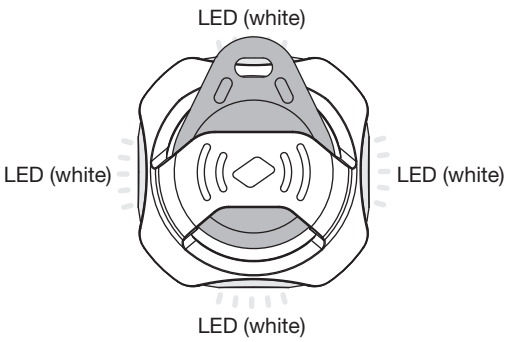


**Card type**

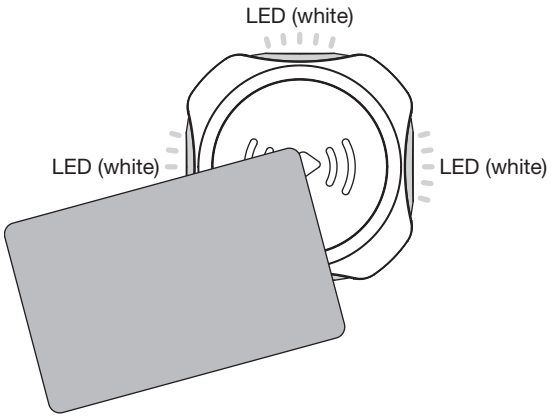


| Buzzer | LED | Status |
|---|---|---|
| None | The LEDs (white) flash rapidly. (100 ms interval) | RFID tag verification is in progress.<br>With tag list registration: The UID of the read RFID tag is compared with the UID registered in the tag list. Regardless of the verification result, the tag information of the read RFID tag is written to the shared memory after the verification is completed. After the writing is completed, wait up to 3 seconds for the host device to read the tag information in the shared memory.<br>No tag list registration: The tag information of the read RFID tag is written to the shared memory. After the writing is completed, the host device waits for a response as a result of reading and collating the tag information of the shared memory. The response wait time is up to 3 seconds. |

A transition may be made to the "Detection mode (holding detection result)" immediately depending on the communication status.

When the Turn off during running is enabled, the LED (white) turns off during operation. For details, refer to Chapter 6 "LED" on page 6-13.

● Holding detection result

After processing the tag information read from the detected RFID tag, it is the period during which the tag information is retained as the detection result. The process of holding the detection result differs depending on whether or not the tag list is registered in the KW2D Smart RFID Reader.

If the tag list is not registered, you can manipulate the OK command and NG command with the value of the coil relay. For details, refer to "2.2 Operate the KW2D Smart RFID Reader" on page 5-18.

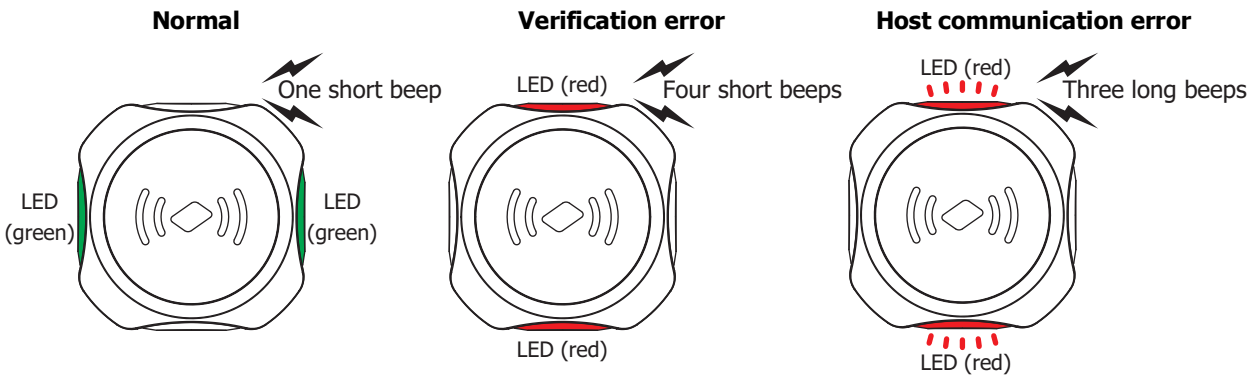


| Buzzer | LED | Status | |
|---|---|---|---|
| One short beep | The LEDs (green) are ON. | Normal | |
| | | With tag list registration: | UID verification matches and the tag information is read from the host device. |
| | | No tag list registration: | OK command from the host device is received. |
| Four short beeps | The LEDs (red) are ON. | Verification error | |
| | | With tag list registration: | UID verification mismatches and the tag information is read from the host device. |
| | | No tag list registration: | NG command from the host device is received. |
| Three long beeps | The LEDs (red) flash rapidly. (100 ms interval) | Host communication error | |
| | | With tag list registration: | Tag information is not read from the host device even after 3 seconds or more passes in "detection mode (during RFID tag verification)". |
| | | No tag list registration: | There is no response from the host device even after 3 seconds or more in "detection mode (during RFID tag verification)". |

- The KW2D Series Smart RFID Reader transitions from "detection mode" to "lock mode" in the following cases.
  - "Enable (Time)" is selected as Lock Mode under the **Tag Read Settings** on the **RFID Reader Settings** tab and the detection result is normal.
  - "Enable (Holding)" is selected as Lock Mode under the **Tag Read Settings** on the **RFID Reader Settings** tab, the detection result is normal, and you keep holding up the RFID tag for more than 1.5 seconds after confirming the detection result.

In cases other than those described above, the RFID reader transitions from "detection mode" to "operation mode (running)". When the RFID reader transitions to "operation mode (running)", the Tag information is set to the initial value. For details on "lock mode", refer to "1.3 Lock Mode" on page 5-8. For the detection result, refer to "Tag information References" on page 5-6.

## ● Tag information References

The KW2D Series Smart RFID Reader determines that the Tag information is read when the host device reads the input relay or input register value in the host communication.
The Tag information is held for a maximum of 3 seconds after the KW2D Series Smart RFID Reader becomes "detection mode (during RFID tag verification)". Read the Tag information with the host device during this time. When the RFID reader transitions to "operation mode", the Tag information is set to the initial value. The input relays and input registers for the Tag information are as follows.

**Input Relay**

R: Read

| Address No. | Description | Explanation | Attri-butes | Initial Value |
|---|---|---|---|---|
| 0001 | Verification result | When the tag list is registered to the KW2D Smart RFID Reader and the UID verification result is a match, the value is 1. | R | 0 |
| 0002 | | When the tag list is registered to the KW2D Smart RFID Reader and the UID verification result is mismatch, the value is 1. | R | 0 |
| 0009 to 0016 | Authority | 1 to 255: Authority of the detected RFID tag | R | 0 |
| 0017 | KW2D special tag detection | 0: KW2D special tag not detected, 1: KW2D special tag detected | R | 0 |

**Input Register**

R: Read

| Address No. | Description | Explanation | Attri-butes | Initial Value |
|---|---|---|---|---|
| 0002 | Status, Verification result, or Authority | 0: Not match, 1 to 255: Authority, 65535: Reading | R | 65535 |
| 0003 | UID data length | 0: UID not stored, 1 to 10: Number of bytes | R | 0 |
| 0004 | UID | Stored in order of upper byte (1st byte) and lower byte (2nd byte) | R | 0 |
| 0005 | | Stored in order of upper byte (3rd byte) and lower byte (4th byte) | R | 0 |
| 0006 | | Stored in order of upper byte (5th byte) and lower byte (6th byte) | R | 0 |
| 0007 | | Stored in order of upper byte (7th byte) and lower byte (8th byte) | R | 0 |
| 0008 | | Stored in order of upper byte (9th byte) and lower byte (10th byte) | R | 0 |
| 0009 to 0011 | Reserved | - | R | - |
| 0012 | Name1 | Stored in order of upper byte (1st character) and lower byte (2nd character) | R | 0 |
| 0013 | | Stored in order of upper byte (3rd character) and lower byte (4th character) | R | 0 |
| 0014 | | Stored in order of upper byte (5th character) and lower byte (6th character) | R | 0 |
| 0015 | | Stored in order of upper byte (7th character) and lower byte (8th character) | R | 0 |
| 0016 | | Stored in order of upper byte (9th character) and lower byte (10th character) | R | 0 |
| 0017 | | Stored in order of upper byte (11th character) and lower byte (12th character) | R | 0 |
| 0018 | | Stored in order of upper byte (13th character) and lower byte (14th character) | R | 0 |
| 0019 | | Stored in order of upper byte (15th character) and lower byte (16th character) | R | 0 |
| 0020 | | Stored in order of upper byte (17th character) and lower byte (18th character) | R | 0 |
| 0021 | Reserved | - | R | - |

| Address No. | Description | Explanation | Attri-butes | Initial Value |
|---|---|---|---|---|
| 0022 | Name2 | Stored in order of upper byte (1st character) and lower byte (2nd character) | R | 0 |
| 0023 | | Stored in order of upper byte (3rd character) and lower byte (4th character) | R | 0 |
| 0024 | | Stored in order of upper byte (5th character) and lower byte (6th character) | R | 0 |
| 0025 | | Stored in order of upper byte (7th character) and lower byte (8th character) | R | 0 |
| 0026 | | Stored in order of upper byte (9th character) and lower byte (10th character) | R | 0 |
| 0027 | | Stored in order of upper byte (11th character) and lower byte (12th character) | R | 0 |
| 0028 | | Stored in order of upper byte (13th character) and lower byte (14th character) | R | 0 |
| 0029 | | Stored in order of upper byte (15th character) and lower byte (16th character) | R | 0 |
| 0030 | | Stored in order of upper byte (17th character) and lower byte (18th character) | R | 0 |
| 0031 | Number of detections | Stores the number of RFID tag detections. | R | 0 |

- The character code used in Name1 and Name2 is set in KW RFID Configurator. For the character encoding, refer to Chapter 6 "Character Code of Tag List" on page 6-17.
- If the input relay and input register are read from the host device via Modbus TCP communication, the initial value may be set in the tag information according to the timing of the reading during the reading process. Read the tag information with either the input relay or the input register only.
- An undefined value is stored in the address number with "Reserved" in the Contents.

## 1.3 Lock Mode

"lock mode" is set in Lock Mode under the **Tag Read Settings** on the **RFID Reader Settings** tab of the KW RFID Configurator.
When the Lock Mode is enabled, the KW2D Smart RFID Reader becomes "lock mode (during lock operation)" (keep tag information) while the RFID tag is stored in the tag folder or holding up the RFID tag. When the lock operation is released, the initial value is set in the tag information and the KW2D Smart RFID Reader returns to "operation mode". For the lock operation, refer to "Unlock operation" on page 5-9.

**KEYFOB type**

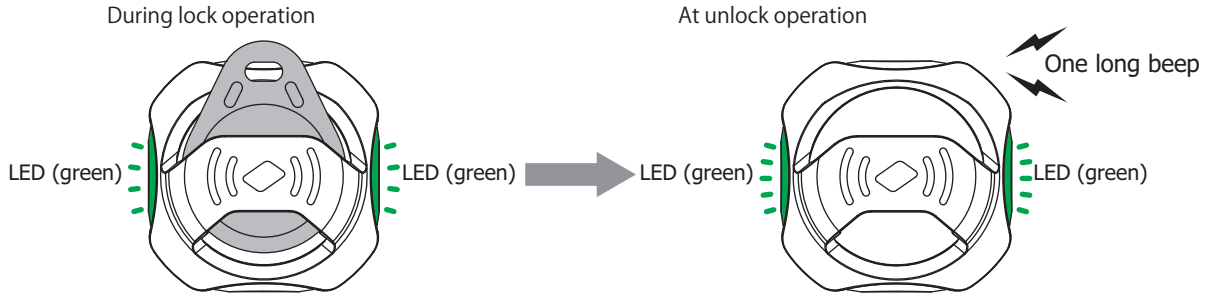


**Card type**

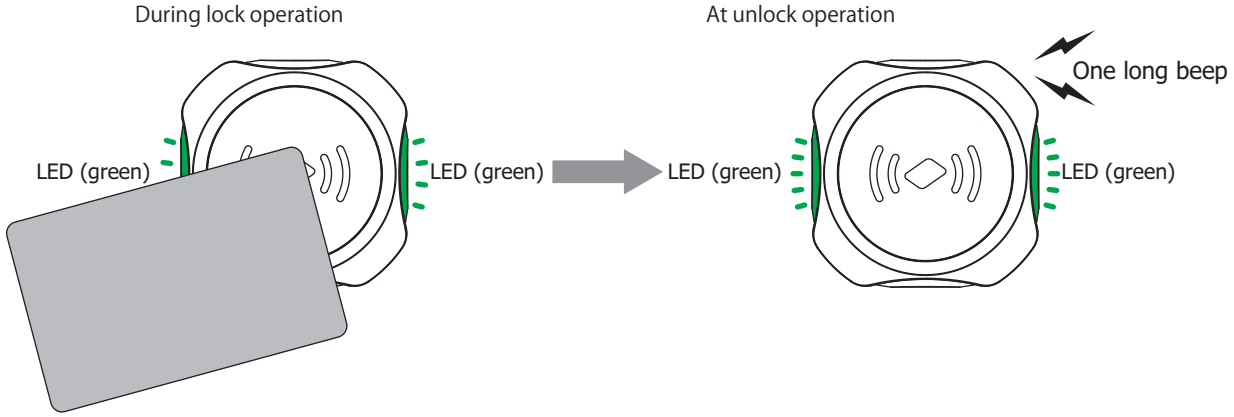


| Buzzer | LED | Status |
|---|---|---|
| None | The LEDs (green) flash. (250 ms interval) | During lock operation |
| One long beep | The LEDs (green) flash rapidly. (100 ms interval) | At unlock operation |

- When "Enable (Holding)" is set in Lock Mode for the KW2D Smart RFID Reader and you hold an RFID tag on it, the KW2D Smart RFID Reader will be in "lock mode (during lock operation)". If you hold another RFID tag on it, and multiple RFID tags are held on it for more than two seconds, the lock operation will be released.
- The above card type illustration is an example of the LED indicators at the time of detection, and does not explain or guarantee the detection position of the RFID tag.

### ● During lock operation

"lock mode (during lock operation)" is the status when the KW2D Series Smart RFID Reader holds the tag information. The KW2D Series Smart RFID Reader transitions from "detection mode" to "lock mode" in the following cases.

- "Enable (Time)" is selected as Lock Mode under the **Tag Read Settings** on the **RFID Reader Settings** tab and the detection result is normal.
- "Enable (Holding)" is selected as Lock Mode under the **Tag Read Settings** on the **RFID Reader Settings** tab, the detection result is normal, and you keep holding up the RFID tag for more than 1.5 seconds after confirming the detection result.

● Unlock operation

When the lock is canceled, the KW2D Series Smart RFID Reader sets the tag information to the initial value and transitions to "operation mode (running)".
The unlocking method varies based on the contents set in Lock Mode under the **Tag Read Settings** on the **RFID Reader Settings** tab of KW RFID Configurator.

Enable (Holding): Detach RFID tag

Enable (Time):
- Wait for the specified time to elapse
- Hold up the same RFID tag again
- Manipulate the value of the coil relay (☞page 5-11)

When you hold up the RFID tag again to forcibly release the lock operation, hold up the RFID tag at least 2 seconds apart. If the interval is short, releasing the lock operation may fail.

- The lock time starts counting down when the RFID tag is removed from the KW2D Series Smart RFID Reader after the it was held up to the RFID reader and locked.
- When "Disable" is selected in Lock Mode, the KW2D Smart RFID Reader does not shift to "lock mode (during lock operation)". The mode shifts from "detection mode" to "operation mode (running)".

● Pausing the lock operation

You can pause the timer that counts the lock time to continue the "lock mode (during lock operation)" status. To pause the timekeeping, manipulate the value of the coil relay. For details, refer to "2.2 Operate the KW2D Smart RFID Reader" on page 5-18.

## 1.4 Adjusting the RFID Tag Detection Sensitivity

This section describes how to adjust the RFID tag detection sensitivity.
Set the reading distance and reading time for RFID tags with **Reading Distance** and **Reading Time** under the **Tag Read Settings** on the **RFID Reader Settings** tab in the KW RFID Configurator.

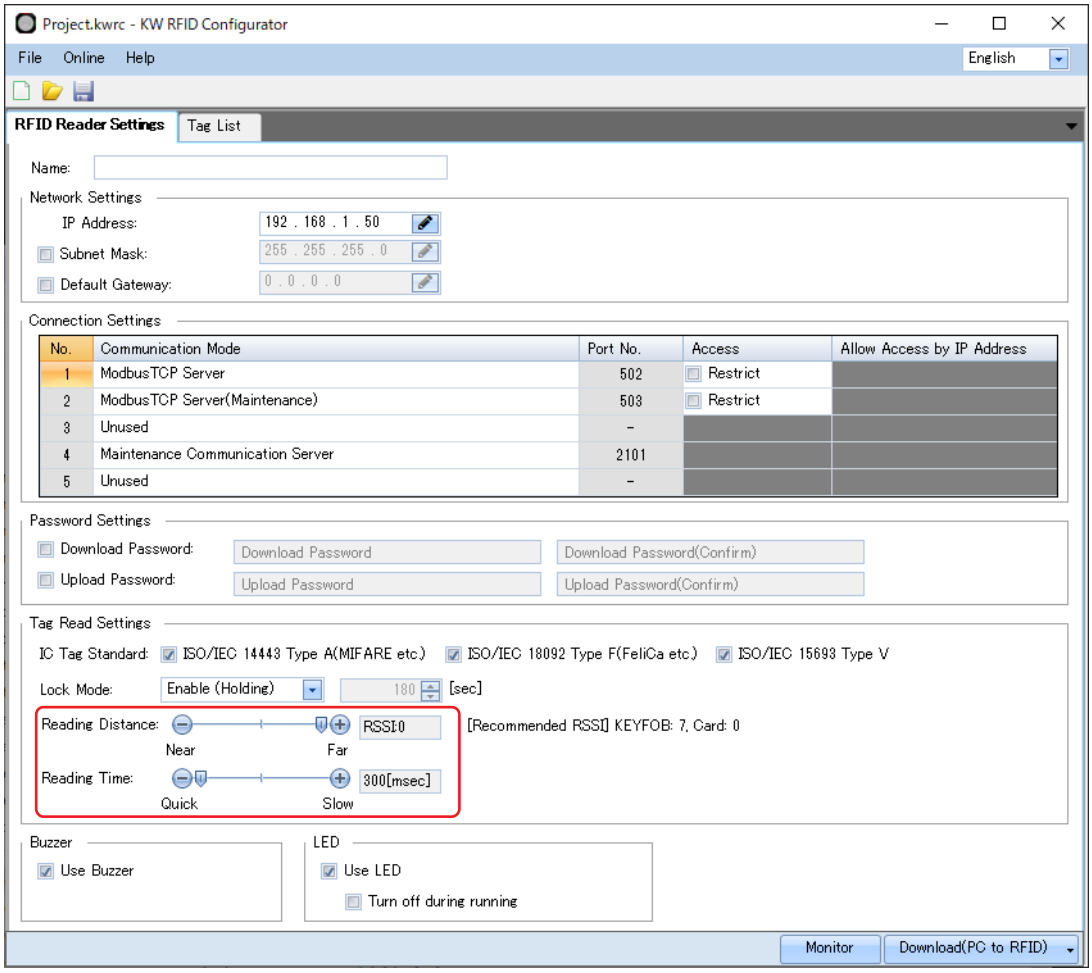


- For **Reading Distance**, specify the distance from the RFID tag to the KW2D Series Smart RFID Reader as a value between 7 (near) and 0 (far). This distance is shown as the RSSI (received signal strength) value in eight steps.
- For **Reading Time**, specify the response time from when the RFID tag is held up to the KW2D Series Smart RFID Reader as a value between 300 milliseconds (quick) and 3000 milliseconds (slow). The value can be set in ten steps in increments of 300 milliseconds.
  The response time has a margin of error of -300 milliseconds. This means the response time is detected between 300 to 600 milliseconds when 600 milliseconds is specified.
  Increase the response time to prevent detection of RFID tags when they mistakenly touch the KW2D Series Smart RFID Reader. For details, refer to Chapter 6 "Tag Read Settings" on page 6-12

- When using a KW2D Series Smart RFID Reader with a tag holder, the tag may be detected before the tag is placed in the holder. Set the reading distance to RSSI value: 6 or 7 (near) to prevent detection of the tag before it is placed in the holder.
- The KW2D Smart RFID Reader is in "detection mode (detecting RFID tag)" from the time the tag is held up until the tag detection is confirmed. For details, refer to "Detecting an RFID tag" on page 5-3.

# 2 KW2D Series Smart RFID Reader Functions

## 2.1 Shared Memory

The KW2D Series Smart RFID Reader has the following shared memory to exchange data with the host device.
R: Read, W: Write

| Shared Memory Device Name | Unit | Attributes | Size | Address (Decimal) |
|---|---|---|---|---|
| Input relay | Bit | R | 64bits | 0001 to 0064 |
| Input register | Word | R | 32words | 0001 to 0032 |
| Coil relay | Bit | W | 64bits | 0001 to 0064 |
| Holding register | Word | W | 32words | 0001 to 0032 |

This shared memory is common regardless of the communication mode.
However, the accessible device name, address, and memory range differ depending on the specified communication mode.

When the power is turned on or reset, the initial value is set in the shared memory.

● Input relay (0001 to 0064)

R: Read

| Address No. | Description | Explanation | Attri-butes | Initial Value |
|---|---|---|---|---|
| 0001*1 | Verification result | When the tag list is registered to the KW2D Smart RFID Reader and the UID verification result is a match, the value is 1. | R | 0 |
| 0002*1 | | When the tag list is registered to the KW2D Smart RFID Reader and the UID verification result is mismatch, the value is 1. | R | 0 |
| 0003 | Host communication status | Indicates the communication status of the Host communication.<br>0: Communicating, 1: Not communicating | R | 0 |
| 0004 | Project status | Indicates whether the KW2D Series Smart RFID Reader has a project.<br>0: Has a project, 1: No project | R | 0 |
| 0005 | Tag list status | Indicates whether or not the tag list is registered in the KW2D Smart RFID Reader.<br>0: Registered, 1: No registration | R | 0 |
| 0006, 0007 | Reserved | - | R | - |
| 0008 | Operation mode | You can check the operation mode of the KW2D Smart RFID Reader.<br>0: Running, 1: Stopped | R | 0 |
| 0009*1 | Authority D1 | Indicates the authority information of the detected RFID tag.<br>1 to 255: Authority<br>However, the content varies based on whether or not the tag list is registered.<br>With tag list registration: The UID is verified against the tag list. If OK, the authority registered in the tag list is read. For a KW2D special tag, if authority 1 to 254 is specified in the tag list, the authority registered in the tag list is read. If 255 is specified in the tag list, the authority added to the tag is read.<br>No tag list registration: For a KW2D special tag, the authority held in the tag is read. For other tags, 0 is read. | R | 0 |
| 0010*1 | Authority D2 | | R | 0 |
| 0011*1 | Authority D3 | | R | 0 |
| 0012*1 | Authority D4 | | R | 0 |
| 0013*1 | Authority D5 | | R | 0 |
| 0014*1 | Authority D6 | | R | 0 |
| 0015*1 | Authority D7 | | R | 0 |
| 0016*1 | Authority D8 | | R | 0 |
| 0017*1 | KW2D special tag detection | 0: KW2D special tag not detected, 1: KW2D Series special tag detected | R | 0 |
| 0018 | Reserved | - | R | - |
| 0019*1 | Command execution status | 0: Waiting for command, 1: Executing command (holds for up to two seconds then returns to 0. When the value of the holding register 0008 is set to 0, this value is also set to 0.) | R | 0 |
| 0020 | Command execution error | 0: Normal, 1: Execution error (holds for up to two seconds then returns to 0. When the value of the holding register 0008 is set to 0, this value is also set to 0.) | R | 0 |
| 0021 | Editing status of tag information | The value is 1 during registration. | R | 0 |
| 0022 | | The value is 1 during deletion. | R | 0 |
| 0023 to 0064 | Reserved | - | R | - |

An undefined value is stored in the address number with "Reserved" in the Contents.

*1 After reading the RFID tag, the tag information is retained for up to three seconds. After that, it is set to the initial value.

● Input register (0001 to 0032)

R: Read

| Address No. | Description | | Explanation | Attri-butes | Initial Value |
|---|---|---|---|---|---|
| 0001 | Reserved | | - | R | - |
| 0002 | Tag information*1 | Status, Verification result or Authority | 65535: Reading RFID tag<br>Other than reading RFID tag, the status is as follows.<br>Upper byte: Status of KW2D Smart RFID Reader<br>00h: Operation mode (running)<br>01h: Tag edit mode (registering)<br>02h: Tag edit mode (deleting)<br>Lower byte: Verification result or Authority<br>0: Not match, 1 to 255: Authority<br>However, the content varies based on whether or not the tag list is registered.<br>With tag list registration: The UID is verified with the tag list. If OK, the authority registered in the tag list is stored. For a KW2D special tag, if authority 1 to 254 is specified in the tag list, the authority registered in the tag list is stored. If 255 is specified in the tag list, the authority assigned to the special tag is stored.<br>No tag list registration: For a KW2D special tag, the authority assigned to the special tag is stored. For other tags, 0 is stored. | R | 65535 |
| 0003 | | UID data length | 0: UID not stored, 1 to 10: Number of bytes | R | 0 |
| 0004 | | UID | Stored in order of upper byte (1st byte) and lower byte (2nd byte) | R | 0 |
| 0005 | | | Stored in order of upper byte (3rd byte) and lower byte (4th byte) | R | 0 |
| 0006 | | | Stored in order of upper byte (5th byte) and lower byte (6th byte) | R | 0 |
| 0007 | | | Stored in order of upper byte (7th byte) and lower byte (8th byte) | R | 0 |
| 0008 | | | Stored in order of upper byte (9th byte) and lower byte (10th byte) | R | 0 |
| 0009 to 0011 | | Reserved | - | R | - |
| 0012 | | Name1 | Stored in order of upper byte (1st character) and lower byte (2nd character) | R | 0 |
| 0013 | | | Stored in order of upper byte (3rd character) and lower byte (4th character) | R | 0 |
| 0014 | | | Stored in order of upper byte (5th character) and lower byte (6th character) | R | 0 |
| 0015 | | | Stored in order of upper byte (7th character) and lower byte (8th character) | R | 0 |
| 0016 | | | Stored in order of upper byte (9th character) and lower byte (10th character) | R | 0 |
| 0017 | | | Stored in order of upper byte (11th character) and lower byte (12th character) | R | 0 |
| 0018 | | | Stored in order of upper byte (13th character) and lower byte (14th character) | R | 0 |
| 0019 | | | Stored in order of upper byte (15th character) and lower byte (16th character) | R | 0 |
| 0020 | | | Stored in order of upper byte (17th character) and lower byte (18th character) | R | 0 |
| 0021 | | Reserved | - | R | - |

*1 After reading the RFID tag, the tag information is retained for up to 3 seconds. After that, it is set to the initial value.

| Address No. | Description | | Explanation | Attri-butes | Initial Value |
|---|---|---|---|---|---|
| 0022 | Tag information*1 | Name2 | Stored in order of upper byte (1st character) and lower byte (2nd character) | R | 0 |
| 0023 | | | Stored in order of upper byte (3rd character) and lower byte (4th character) | R | 0 |
| 0024 | | | Stored in order of upper byte (5th character) and lower byte (6th character) | R | 0 |
| 0025 | | | Stored in order of upper byte (7th character) and lower byte (8th character) | R | 0 |
| 0026 | | | Stored in order of upper byte (9th character) and lower byte (10th character) | R | 0 |
| 0027 | | | Stored in order of upper byte (11th character) and lower byte (12th character) | R | 0 |
| 0028 | | | Stored in order of upper byte (13th character) and lower byte (14th character) | R | 0 |
| 0029 | | | Stored in order of upper byte (15th character) and lower byte (16th character) | R | 0 |
| 0030 | | | Stored in order of upper byte (17th character) and lower byte (18th character) | R | 0 |
| 0031*2 | | Number of detections | Stores the number of RFID tag detections. | R | 0 |
| 0032 | Lock operation time (current value) | | Stores the lock operation time during downcounting. | R | 0 |

An undefined value is stored in the address number with "Reserved" in the Contents.

*1 After reading the RFID tag, the tag information is retained for up to 3 seconds. After that, it is set to the initial value.
*2 The input register 0031 (number of detections) counts up for each tag detection. Since the tag information value is updated at the same time as the count is increased, the memory update timing can be grasped by monitoring the change in the number of detections.

● Coil Relay (0001 to 0016)

W: Write

| Address No. | Description | Explanation | Attri-butes | Initial Value |
|---|---|---|---|---|
| 0001 | Switching operation mode | Switches the operation mode of the KW2D Smart RFID Reader.<br>0: to Running, 1: to Stopped | W | 0 |
| 0002 | Releasing lock operation | When the value changes to 1, the lock operation is released. | W | 0 |
| 0003 | Pausing lock operation timer | When the value changes to 1, counting the lock operation time is paused. | W | 0 |
| 0004 to 0006 | Reserved | - | W | - |
| 0007 | Verification result on host device | When the verification result of the tag information is "OK command", the host device writes 1. | W | 0 |
| 0008 | | When the verification result of the tag information is "Failure command", the host device writes 1. | W | 0 |
| 0009 | Manual control of buzzer | Enables or disables the manual operation of the buzzer.<br>0: Disable, 1: Enable | W | 0 |
| 0010 | Ring or stop the buzzer | Operate the buzzer.<br>0: Stop, 1: Ring | W | 0 |
| 0011 | Manual control of the LEDs (red) | Enables or disables the manual operation of the LEDs(red).<br>0: Disable, 1: Enable | W | 0 |
| 0012 | Turn on or off the LEDs (red) | Operate the LEDs (red).<br>0: Turn off, 1: Turn on | W | 0 |
| 0013 | Manual control of the LEDs (white) | Enables or disables the manual operation of the LEDs (white).<br>0: Disable, 1: Enable | W | 0 |
| 0014 | Turn on or off the LEDs (white) | Operate the LEDs (white).<br>0: Turn off, 1: Turn on | W | 0 |
| 0015 | Manual control of the LEDs (green) | Enables or disables the manual operation of the LEDs (green).<br>0: Disable, 1: Enable | W | 0 |
| 0016 | Turn on or off the LEDs (green) | Operate the LEDs (green).<br>0: Turn off, 1: Turn on | W | 0 |
| 0017 to 0064 | Reserved | - | W | - |

Do not write a value other than 0 to the address number with "Reserved" in the Contents.

● Holding Register (0001 to 0032)

W: Write

| Address No. | Description | Explanation | Attri-butes | Initial Value |
|---|---|---|---|---|
| 0001 to 0007 | Reserved | - | W | - |
| 0008 | Command Authority | Upper byte: Specify the command to be executed with the following values.<br>00h: Clear command<br>To execute the same command continuously, set 00h between commands.<br>01h: Registration<br>Shifts to "tag edit mode (registering)". The authority set in the lower byte of the holding register 0008 will be the default.<br>02h: Delete<br>Shifts to "tag edit mode (deleting)".<br>04h: Cancel<br>Discards the contents registered or deleted while the "tag edit mode" and returns to the "operation mode".<br>08h: Exit<br>When any changes have been made to the tag list, the changes are reflected in the tag list of the KW2D Smart RFID Reader, and the KW2D Smart RFID Reader restarts. When there are no changes in the tag list, it returns to the "operation mode".<br>10h: Update<br>When the KW2D Smart RFID Reader is in the "tag edit mode (registering)", the contents of holding registers 0008 to 0032 are reflected in the tag list of the KW2D Smart RFID Reader.<br>Lower byte: Specify the authority (1 to 255) for the UID. However, 0 is treated as 255. | W | 0 |
| 0009 | UID data length | 0: UID not stored, 1 to 10: Number of bytes | W | 0 |
| 0010 | UID | Stored in order of upper byte (1st byte) and lower byte (2nd byte) | W | 0 |
| 0011 | | Stored in order of upper byte (3rd byte) and lower byte (4th byte) | W | 0 |
| 0012 | | Stored in order of upper byte (5th byte) and lower byte (6th byte) | W | 0 |
| 0013 | | Stored in order of upper byte (7th byte) and lower byte (8th byte) | W | 0 |
| 0014 | | Stored in order of upper byte (9th byte) and lower byte (10th byte) | W | 0 |
| 0015 | Name1 | Stored in order of upper byte (1st character) and lower byte (2nd character) | W | 0 |
| 0016 | | Stored in order of upper byte (3rd character) and lower byte (4th character) | W | 0 |
| 0017 | | Stored in order of upper byte (5th character) and lower byte (6th character) | W | 0 |
| 0018 | | Stored in order of upper byte (7th character) and lower byte (8th character) | W | 0 |
| 0019 | | Stored in order of upper byte (9th character) and lower byte (10th character) | W | 0 |
| 0020 | | Stored in order of upper byte (11th character) and lower byte (12th character) | W | 0 |
| 0021 | | Stored in order of upper byte (13th character) and lower byte (14th character) | W | 0 |
| 0022 | | Stored in order of upper byte (15th character) and lower byte (16th character) | W | 0 |
| 0023 | | Stored in order of upper byte (17th character) and lower byte (18th character) | W | 0 |

| Address No. | Description | Explanation | Attri-butes | Initial Value |
|---|---|---|---|---|
| 0024 | Name2 | Stored in order of upper byte (1st character) and lower byte (2nd character) | W | 0 |
| 0025 | | Stored in order of upper byte (3rd character) and lower byte (4th character) | W | 0 |
| 0026 | | Stored in order of upper byte (5th character) and lower byte (6th character) | W | 0 |
| 0027 | | Stored in order of upper byte (7th character) and lower byte (8th character) | W | 0 |
| 0028 | | Stored in order of upper byte (9th character) and lower byte (10th character) | W | 0 |
| 0029 | | Stored in order of upper byte (11th character) and lower byte (12th character) | W | 0 |
| 0030 | | Stored in order of upper byte (13th character) and lower byte (14th character) | W | 0 |
| 0031 | | Stored in order of upper byte (15th character) and lower byte (16th character) | W | 0 |
| 0032 | | Stored in order of upper byte (17th character) and lower byte (18th character) | W | 0 |

Do not write a value other than 0 to the address number with "Reserved" in the Contents.

## 2.2 Operate the KW2D Smart RFID Reader

The KW2D Smart RFID Reader can be operated from the host device using the shared memory.

### ● Check the verification result on the host device

When the tag list is not registered, the host device writes "1" to coil relay 0007 and 0008 as an OK or Failure command as a verification result.

W: Write

| Coil Relay | Description | Explanation | Attri-butes | Initial Value |
|---|---|---|---|---|
| 0007 | Verification result on host device | When the verification result of the tag information is "OK command", the host device writes 1. | W | 0 |
| 0008 | | When the verification result of the tag information is "Failure command", the host device writes 1. | W | 0 |

- The failure command has priority when the values of coil relays 0007 and 0008 are set to "1" at the same time.
- When writing to the coil relay from multiple host devices, the expected operation may not be obtained. Use only one host device to write to the shared memory.

### ● Unlock operation

To release the lock operation, write "1" to coil relay 0002.

W: Write

| Coil Relay | Description | Explanation | Attri-butes | Initial Value |
|---|---|---|---|---|
| 0002 | Releasing lock operation | When the value changes to 1, the lock operation is released. | W | 0 |

### ● Check and pause lock operation time

The lock operation time during timekeeping can be confirmed by the value of the input register 0032. To pause counting the lock operation time and continue the lock operation, write "1" to the coil relay 0003.

R: Read, W: Write

| Input Register | Description | Explanation | Attri-butes | Initial Value |
|---|---|---|---|---|
| 0032 | Lock operation time (current value) | Stores the lock operation time during downcounting. | R | 0 |

| Coil Relay | Description | Explanation | Attri-butes | Initial Value |
|---|---|---|---|---|
| 0003 | Pausing lock operation timer | When the value changes to 1, counting the lock operation time is paused. | W | 0 |

### ● Stop the KW2D Smart RFID Reader

Sops RFID tag detection processing.

W: Write

| Coil Relay | Description | Explanation | Attri-butes | Initial Value |
|---|---|---|---|---|
| 0001 | Switching operation mode | Switches the operation mode of the KW2D Smart RFID Reader.<br>0: to Running, 1: to Stopped | W | 0 |

● Check the status of the KW2D Smart RFID Reader

The status of the KW2D Smart RFID Reader can be confirmed by the value of the input relay 0008.

R: Read

| Input Relay | Description | Explanation | Attri-butes | Initial Value |
|---|---|---|---|---|
| 0008 | Operation mode | You can check the operation mode of the KW2D Smart RFID Reader.<br>0: Running, 1: Stopped | R | 0 |

The buzzer and LEDs can be remotely controlled from the host device even when the KW2D Series Smart RFID Reader is set to the "stopped" status by enabling manual control of the buzzer and LEDs. For manual control of the LEDs and buzzer, refer to "Operate the buzzer and LED" on page 5-19.

● Operate the buzzer and LED

When you enable manual operation of the buzzer and LED, you can operate the buzzer and LED with the value of the coil relays.

On the RFID Reader Settings tab of KW RFID Configurator, clear the Use buzzer check box or Use LED check box to enable manual operation of the buzzer or LED regardless of the value of the coil relay.

W: Write

| Address No. | Description | Explanation | Attri-butes | Initial Value |
|---|---|---|---|---|
| 0009 | Manual control of the buzzer | Enables or disables the manual operation of the buzzer.<br>0: Disable, 1: Enable | W | 0 |
| 0010 | Ring or stop the buzzer | Operate the buzzer.<br>0: Stop, 1: Ring | W | 0 |
| 0011 | Manual control of the LEDs (red) | Enables or disables the manual operation of the LEDs(red).<br>0: Disable, 1: Enable | W | 0 |
| 0012 | Turn on or off the LEDs (red) | Operate the LEDs (red).<br>0: Turn off, 1: Turn on | W | 0 |
| 0013 | Manual control of the LEDs (white) | Enables or disables the manual operation of the LEDs (white).<br>0: Disable, 1: Enable | W | 0 |
| 0014 | Turn on or off the LEDs (white) | Operate the LEDs (white).<br>0: Turn off, 1: Turn on | W | 0 |
| 0015 | Manual control of the LEDs (green) | Enables or disables the manual operation of the LEDs (green).<br>0: Disable, 1: Enable | W | 0 |
| 0016 | Turn on or off the LEDs (green) | Operate the LEDs (green).<br>0: Turn off, 1: Turn on | W | 0 |

## 2.3 Edit the tag list

The tag list registered in the KW2D Smart RFID Reader can be edited by using the master tag or by operating the shared memory from the host device.

When the Protect check box in the tag list is cleared, you can edit the tag list even if the project is password protected.

The processing of the KW2D Smart RFID Reader and tag list varies based on the operation performed in "tag edit mode (registering)" or "tag editing mode (deletion)".

- Download project or tag list
  Discards the tag list being edited and shifts to "operation mode (running)". After downloading, it works with the downloaded tag list.
- Upload project
  Keeps the tag list being edited in "tag edit mode". However, the uploaded tag list is the one before editing.

● Use master tags

You can enable or disable the RFID tags registered in the tag list, and register the read RFID tags in the tag list with the registration master tag or deletion master tag prepared in advance. For the master tags, refer to Chapter 6 "Master Tag" on page 6-14.

Enable or register RFID tags

Enables RFID tags that are registered in the tag list and whose Enable/Disable is "Disabled".
For RFID tags that are not registered in the tag list, registers the UID of the read tag.

### Operating Procedure

1 Hold the registration master tag over the KW2D Smart RFID Reader.
The KW2D Smart RFID Reader shifts in "tag edit mode (registering)".

Running
The LEDs (white) flash slowly.

Registering
The LEDs (green) are ON and the LEDs (white) flash rapidly.

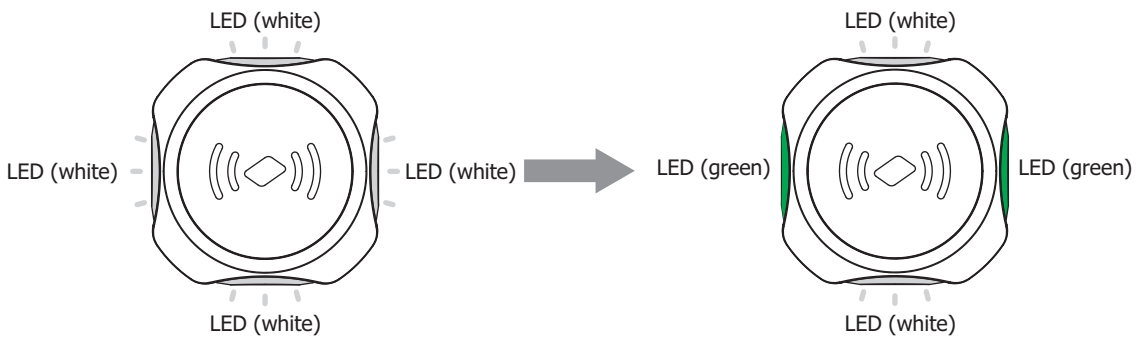


| Buzzer | LED | Status |
|---|---|---|
| None | The LEDs (green) are ON and the LEDs (white) flash rapidly. (100 ms interval) | Waiting to read the tag to enable or register. |

**2** Hold up the RFID tags to be enabled or registered one by one.

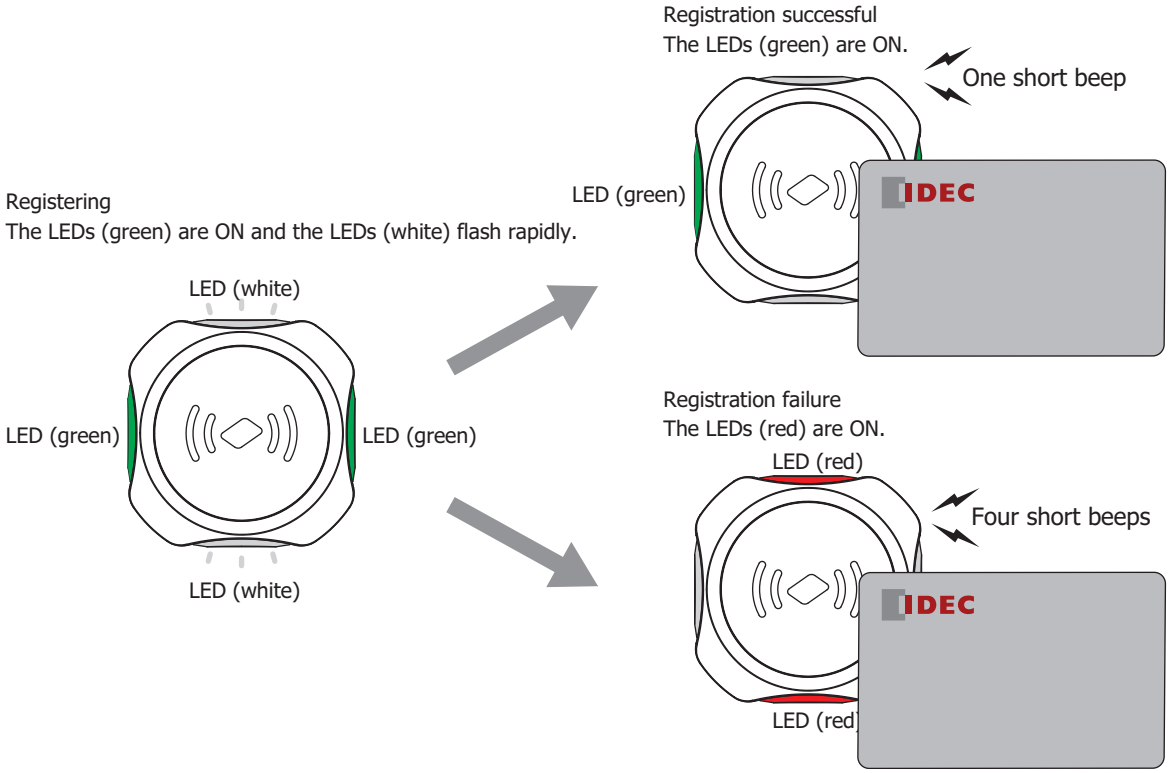


| Buzzer | LED | Status |
|---|---|---|
| One short beep | The LEDs (green) are ON. | Registration successful |
| Four short beeps | The LEDs (red) are ON. | Registration failure |

**3** Hold up the registration master tag again.

When the tag list update is complete, the KW2D Smart RFID Reader is restarted.
If you turn off the power without performing step **3**, the changes made here will be discarded and the tag list will be returned to the one before changing.

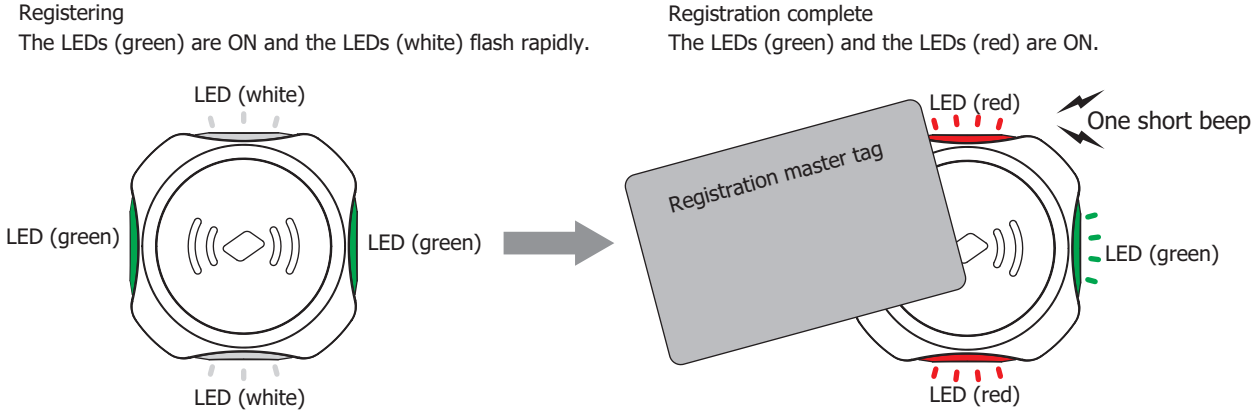


| Buzzer | LED | Status |
|---|---|---|
| One short beep | The LEDs (green) and the LEDs (red) are ON. | Completed updating the tag list of the KW2D Smart RFID Reader |

- **Name1** of the registered tag is "ADD TAG***" (***: Registration position of tag list 001 to 500), **Authority (1~255)** is the same as the authority of the registration master tag, the check box of **Protect** is cleared.
- When the number of registered tags exceeds 500, registered tags for which the check box of Enable/Disable is cleared (Disable) and the check box of Protect is cleared are overwritten. If there is no disabled tag in the tag list, the KW2D Smart RFID Reader will be in the "registration failed" state.

Disable RFID tag

"Disable" RFID tags that are registered in the tag list and the check box of Enable/Disable is selected (enabled).

- The registration master tag and the deletion master tag cannot be disabled.
- If the number of registered tags exceeds 500, the registered contents of the tags disabled by the delete operation will be deleted from the tag list.

## Operating Procedure

1. Hold the master tag for deletion.
   The KW2D Smart RFID Reader is in "tag edit mode (deleting)".

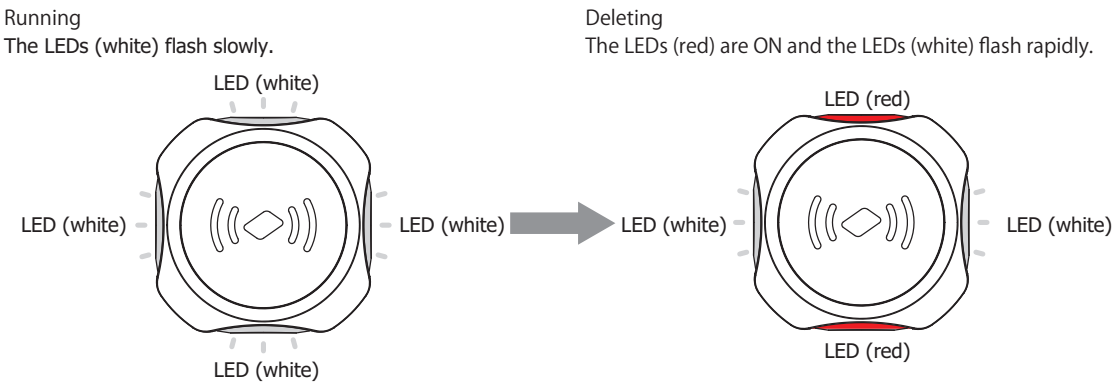


| Buzzer | LED | Status |
|---|---|---|
| None | The LEDs (red) are ON and the LEDs (white) flash rapidly. (100 ms interval) | Waiting to read the tag to disable |

2. Hold the RFID tags to disable one by one.

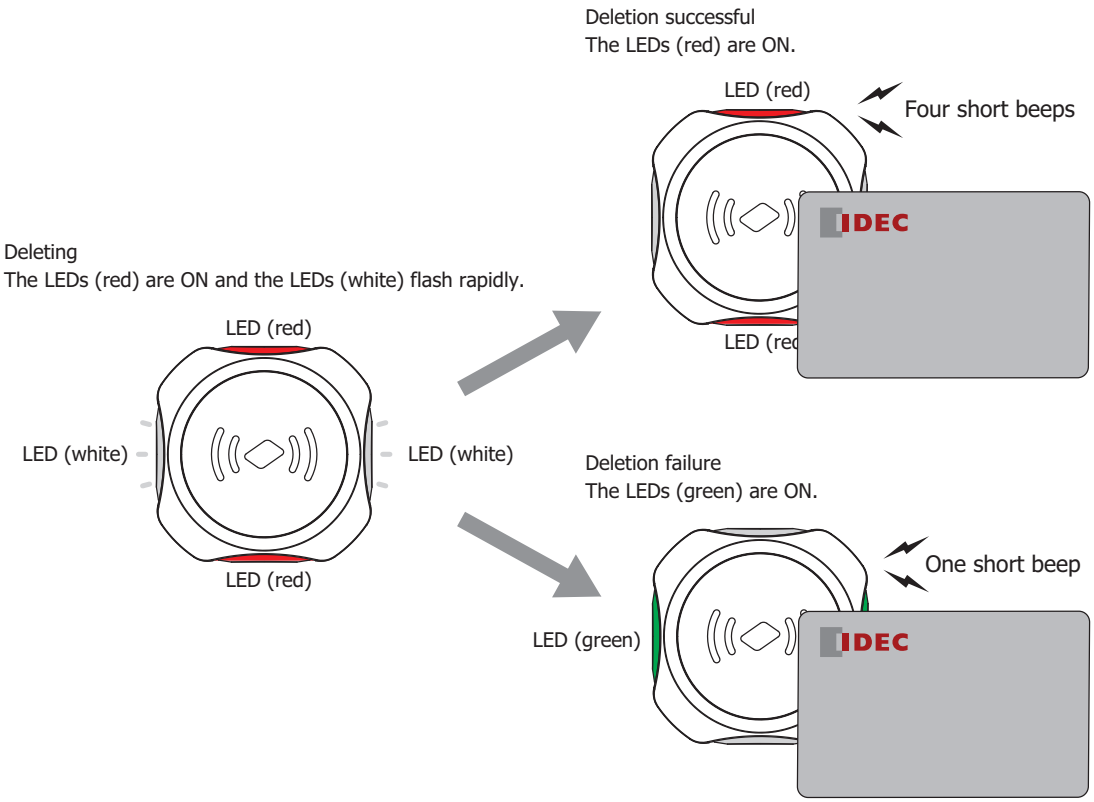


| Buzzer | LED | Status |
|---|---|---|
| Four short beeps | The LEDs (red) are ON. | Deletion successful |
| One short beep | The LEDs (green) are ON. | Deletion failure |

**3** Hold up the deletion master tag again.

Disables the RFID tag to be deleted while retaining the tag information in the tag list. When the tag list update is complete, the KW2D Smart RFID Reader is restarted.

Deleting
The LEDs (red) are ON and the LEDs (white) flash rapidly.

Deletion complete
The LEDs (green) and the LEDs (red) are ON.

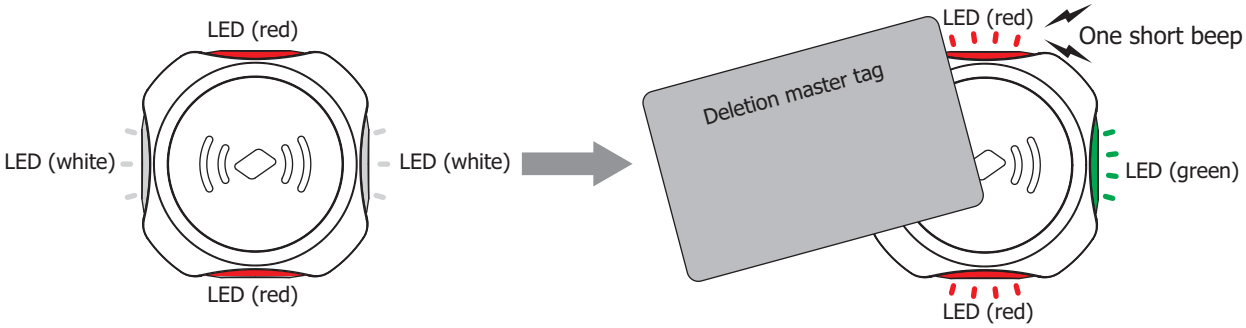


| Buzzer | LED | Status |
|---|---|---|
| One short beep | The LEDs (green) and the LEDs (red) are ON. | Completed updating the tag list of the KW2D Smart RFID Reader |

● Use shared memory

You can register or edit the UID in the tag list of the KW2D Smart RFID Reader by operating the shared memory holding registers 0008 to 0032 from the host device. You can also check the command execution status on the input relays 0019 to 0022.

Register and edit UID

The allocation of the holding register address number is as follows.

W: Write

| Address No. | Description | Explanation | Attri-butes | Initial Value |
|---|---|---|---|---|
| 0008 | Command Authority | Upper byte: Specify the command to be executed with the following values.<br>00h: Clear command<br>To execute the same command continuously, set 00h between commands.<br>01h: Registration<br>Shifts to "tag edit mode (registering)". The authority set in the lower byte of the holding register 0008 is the default.<br>02h: Delete<br>Shifts to "tag edit mode (deleting)".<br>04h: Cancel<br>Discards the contents registered or deleted in the "tag edit mode" and returns to the "operation mode".<br>08h: Exit<br>When any changes have been made to the tag list, the changes is reflected in the tag list of the KW2D Smart RFID Reader, and restarts.<br>When there are no changes in the tag list, it returns to the "operation mode".<br>10h: Update<br>"In the "tag edit mode (registering)", the contents of holding registers 0008 to 0032 are reflected in the tag list of the KW2D Smart RFID Reader.<br>Lower byte: Specify the authority (1 to 255) for the UID. However, 0 is treated as 255. | W | 0 |
| 0009 | UID data length | 0: UID not stored, 1 to 10: Number of bytes | W | 0 |
| 0010 | UID | Stored in order of upper byte (1st byte) and lower byte (2nd byte) | W | 0 |
| 0011 | | Stored in order of upper byte (3rd byte) and lower byte (4th byte) | W | 0 |
| 0012 | | Stored in order of upper byte (5th byte) and lower byte (6th byte) | W | 0 |
| 0013 | | Stored in order of upper byte (7th byte) and lower byte (8th byte) | W | 0 |
| 0014 | | Stored in order of upper byte (9th byte) and lower byte (10th byte) | W | 0 |
| 0015 | Name1 | Stored in order of upper byte (1st character) and lower byte (2nd character) | W | 0 |
| 0016 | | Stored in order of upper byte (3rd character) and lower byte (4th character) | W | 0 |
| 0017 | | Stored in order of upper byte (5th character) and lower byte (6th character) | W | 0 |
| 0018 | | Stored in order of upper byte (7th character) and lower byte (8th character) | W | 0 |
| 0019 | | Stored in order of upper byte (9th character) and lower byte (10th character) | W | 0 |
| 0020 | | Stored in order of upper byte (11th character) and lower byte (12th character) | W | 0 |
| 0021 | | Stored in order of upper byte (13th character) and lower byte (14th character) | W | 0 |
| 0022 | | Stored in order of upper byte (15th character) and lower byte (16th character) | W | 0 |
| 0023 | | Stored in order of upper byte (17th character) and lower byte (18th character) | W | 0 |

| Address No. | Description | Explanation | Attri-butes | Initial Value |
|---|---|---|---|---|
| 0024 | Name2 | Stored in order of upper byte (1st character) and lower byte (2nd character) | W | 0 |
| 0025 | | Stored in order of upper byte (3rd character) and lower byte (4th character) | W | 0 |
| 0026 | | Stored in order of upper byte (5th character) and lower byte (6th character) | W | 0 |
| 0027 | | Stored in order of upper byte (7th character) and lower byte (8th character) | W | 0 |
| 0028 | | Stored in order of upper byte (9th character) and lower byte (10th character) | W | 0 |
| 0029 | | Stored in order of upper byte (11th character) and lower byte (12th character) | W | 0 |
| 0030 | | Stored in order of upper byte (13th character) and lower byte (14th character) | W | 0 |
| 0031 | | Stored in order of upper byte (15th character) and lower byte (16th character) | W | 0 |
| 0032 | | Stored in order of upper byte (17th character) and lower byte (18th character) | W | 0 |

In "tag edit mode (registering)", new tags can be registered. It is in the same state as when the registration master tag is held over.
In "tag edit mode (deleting)", the tags registered in the tag list can be disabled. It is the same state as when the deletion master tag is held over.
For the registration master tag and the deletion master tag, refer to "Use master tags" on page 5-20.

Command execution status

The allocation of the input relay address number is as follows.

R: Read

| Address No. | Description | Explanation | Attri-butes | Initial Value |
|---|---|---|---|---|
| 0019*1 | Command execution status | 0: Waiting for command, 1: Executing command (holds for up to 2 seconds then returns to 0. When the value of the holding register 0008 is set to 0, this value is also set to 0.) | R | 0 |
| 0020 | Command execution error | 0: Normal, 1: Execution error (holds for up to 2 seconds then returns to 0. When the value of the holding register 0008 is set to 0, this value is also set to 0.) | R | 0 |
| 0021 | Editing status of tag information | The value is 1 during registration. | R | 0 |
| 0022 | | The value is 1 during deletion. | R | 0 |

In the following cases, a command execution error (the value of input relay 0020 is 1) will occur.

- You try to register more than 500 RFID tags.
- You try to update the tag list even though the KW2D Smart RFID Reader is not in "tag edit mode (registering)".
- After registering an RFID tag in "tag edit mode (registering)", you try to shift to "tag edit mode (deleting)" without an end command.
- After deleting an RFID tag in "tag edit mode (deleting)", you try to shift to "tag edit mode (registering)" without an end command.
- You try to update a tag with the check box of Protect selected.

*1 When the command is executed, the value of the input relay 0019 is set to 1 for 2 seconds. To execute the same command continuously, write 00h to the upper byte (command) of the holding register 0008 after the value of the input relay 0019 becomes 1.

## Registration procedure

*1* Write 01xxh (xx: Authority set to the tag to register) to the holding register 0008.
The KW2D Smart RFID Reader shifts to "tag edit mode (registering)".

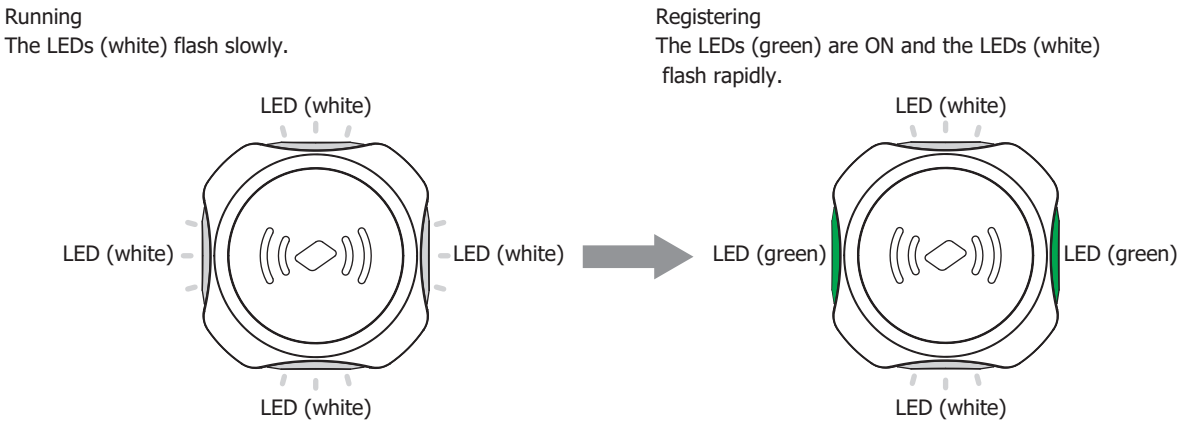


| Buzzer | LED | Status |
|---|---|---|
| None | The LEDs (green) are ON and the LEDs (white) flash rapidly. | Waiting to read the tag to enable or register. |

If you register using an RFID tag, go to step *2*, or if you register using shared memory, go to step *3*.

*2* Hold up the RFID tag to be registered.

**Name1** of the successfully registered tag is "ADD TAGXXX" (XXX: Registration position 001 to 500 in the tag list), **Authority (1 to 255)** is the authority written in the holding register 0008 in the registration procedure 1, and the check box of **Protect** is cleared.

Repeat step *2* as many times as the number of RFID tags to be registered. Next, proceed to step *4*.

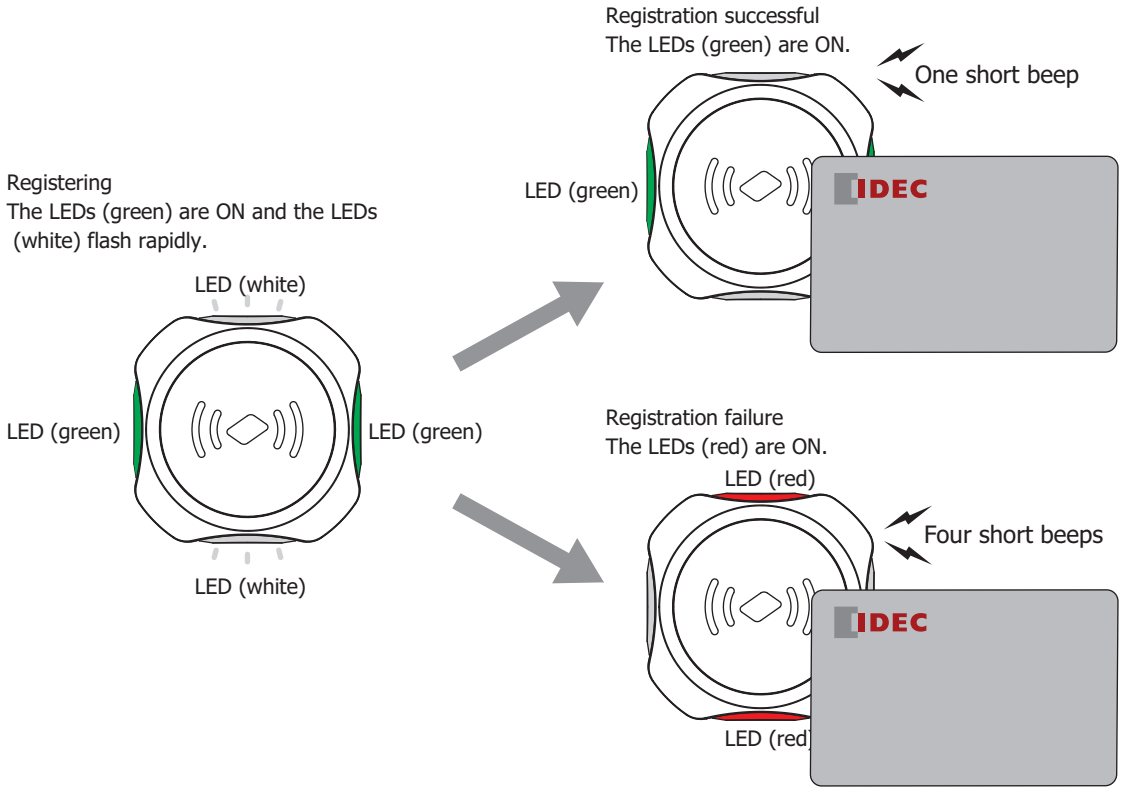


| Buzzer | LED | Status |
|---|---|---|
| One short beep | The LEDs (green) are ON. | Successful registration |
| Four short beeps | The LEDs (red) are ON. | Registration failure |

**3** Write the tag information to be registered to the holding registers 0009 to 0032 and 10xxh (xx: Authority to set) to the holding register 0008.

Repeat step **3** for the required number of tag information according to the number of RFID tags to be registered. To execute the same command continuously, after the value of the input relay 0019 changes to 1, write 00xxh (xx: Authority) to the holding register 0008 to initialize the command, and then write the next command.

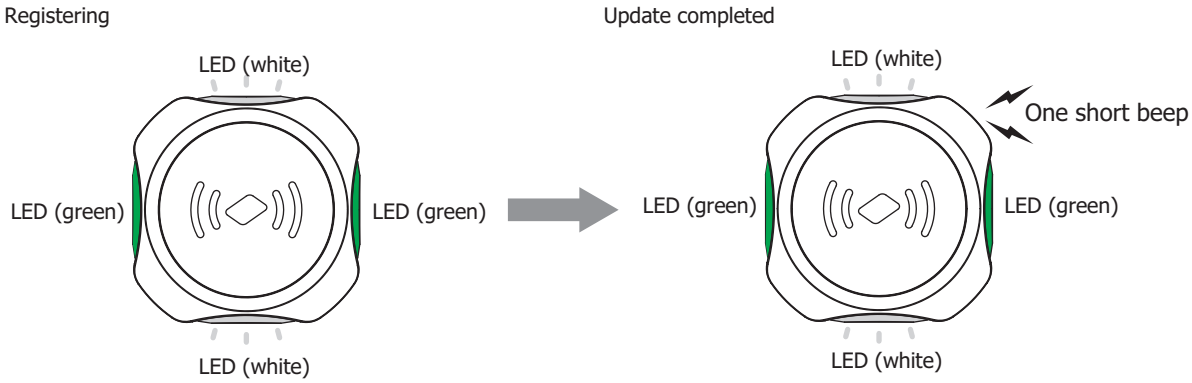


| Buzzer | LED | Status |
|---|---|---|
| One short beep | The LEDs (green) are ON and the LEDs (white) flash rapidly. (100 ms interval) | Update command (write 10xxh to holding register 0008) is accepted. |

**4** Write 08xxh (xx: Authority to set) to the holding register 0008.

When there is a change in the tag list, update the tag list of the KW2D Smart RFID Reader and restart. When there is no change in the tag list, return to "operation mode (running)".
If the power is turned off without performing step **4**, the contents registered here will be discarded and the tag list before registration will be restored.

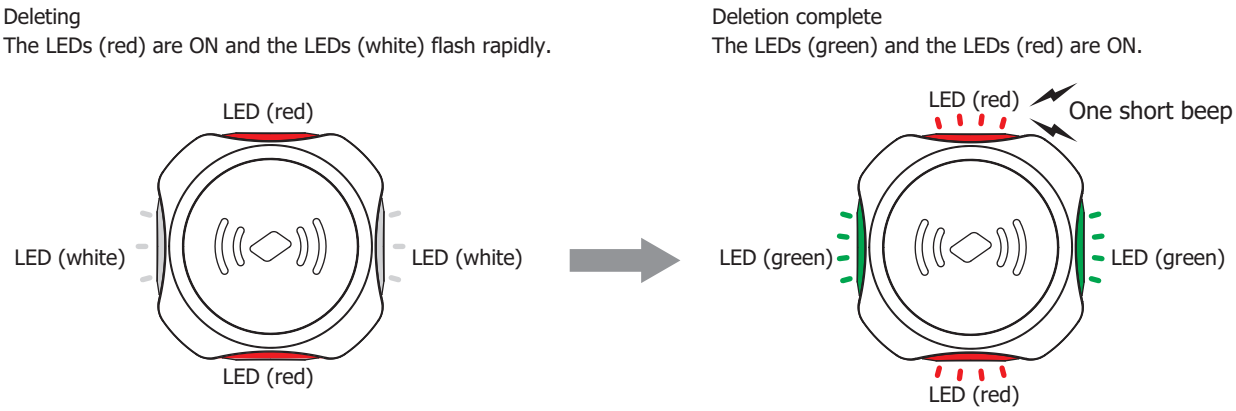


| Buzzer | LED | Status |
|---|---|---|
| One short beep | The LEDs (green) and the LEDs (red) are ON. | Completed updating the tag list of the KW2D Smart RFID Reader |

To cancel the registration of the tag, write 04xxh (xx: Authority) to the holding register 0008. The KW2D Smart RFID Reader returns to "operation mode (running)".

When the number of registrations exceeds 500, among the RFID tags registered using the master tag or shared memory, overwrite and register additionally the tag which the check box of Enable/Disable is cleared (Disable) and the check box of Protect is also cleared. If there is no disabled tag in the tag list, the KW2D Smart RFID Reader will be in the "registration failed" state.

### Procedure for changing tag information registered in the tag list

*1* Write 01xxh (xx: Authority set to the tag information to change) to the holding register 0008.
The KW2D Smart RFID Reader shifts to "tag edit mode (registering)".

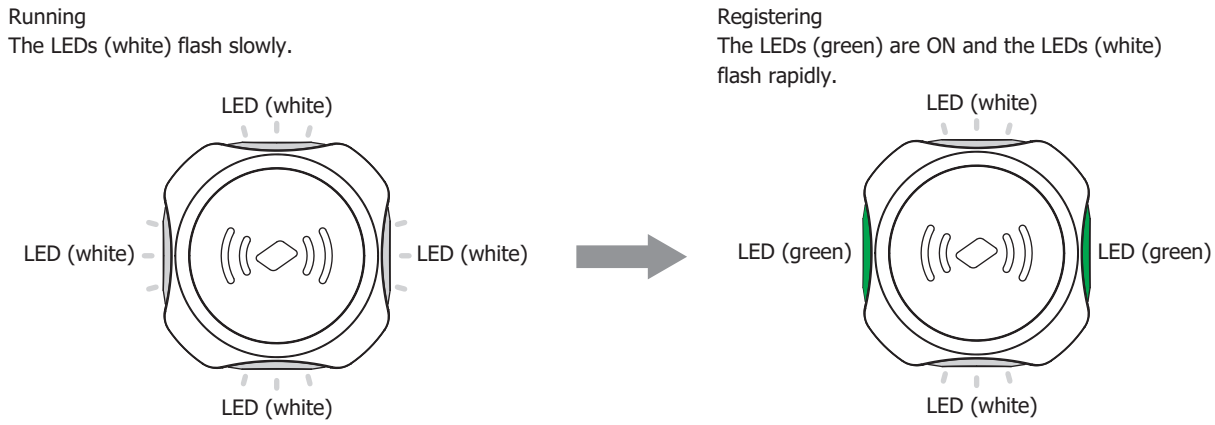


| Buzzer | LED | Status |
|---|---|---|
| None | The LEDs (green) are ON and the LEDs (white) flash rapidly. (100 ms interval) | Waiting to receive the tag information change command. |

*2* Write the changed contents to the holding registers 0009 to 0032 and 10xxh (xx: Authority to set) to the holding register 0008.

Repeat step *2* for the number of tag information to change. To execute the same command continuously, after the value of the input relay 0019 changes to 1, write 00xxh (xx: Authority) to the holding register 0008 to initialize the command, and then write the next command.

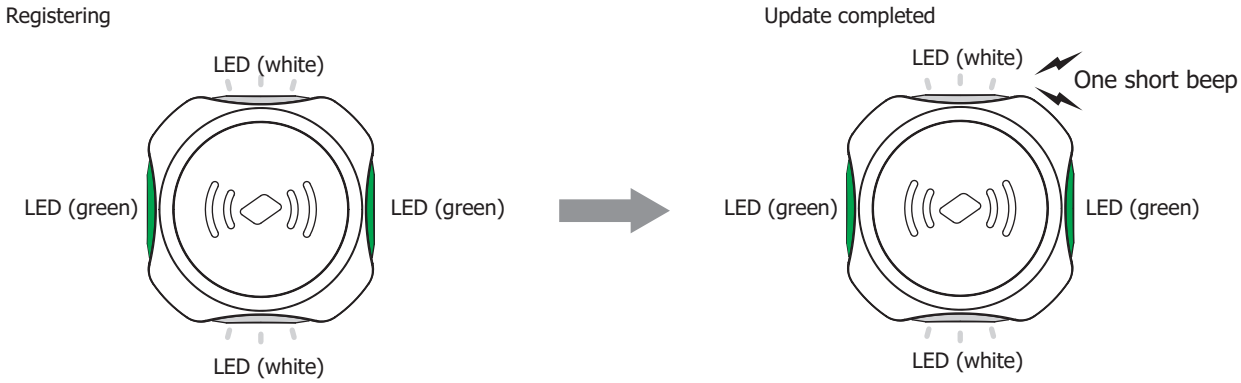


| Buzzer | LED | Status |
|---|---|---|
| One short beep | The LEDs (green) are ON and the LEDs (white) flash rapidly. (100 ms interval) | Accepted update command (write 10xxh to holding register 0008) |

*3* Write 08xxh (xx: Authority) to the holding register 0008.

When there is a change in the tag list, update the tag list of the KW2D Smart RFID Reader and restart.
If the power is turned off without performing step *3*, the contents registered here will be discarded and the tag list before registration will be restored.

Deleting
The LEDs (red) are ON and the LEDs (white) flash rapidly.

Deletion complete
The LEDs (green) and the LEDs (red) are ON.

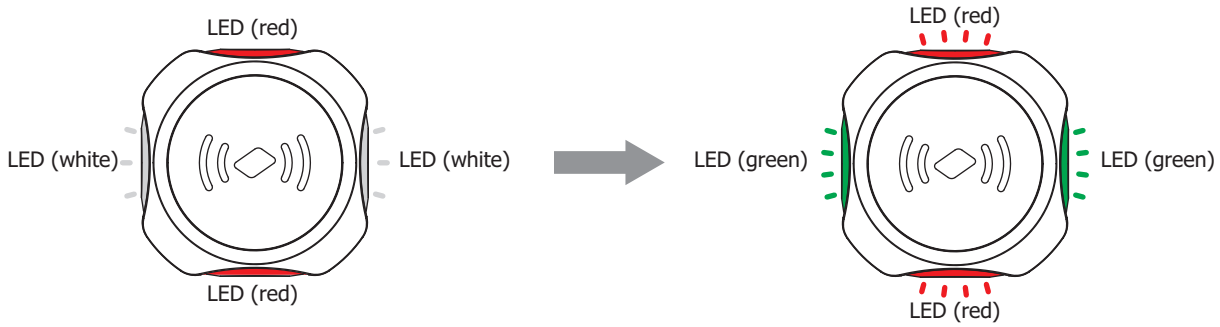


| Buzzer | LED | Status |
|---|---|---|
| One short beep | The LEDs (green) and the LEDs (red) are ON. | Completed updating the tag list of the KW2D Smart RFID Reader |

To cancel the registration of the tag, write 04xxh (xx: Authority) to the holding register 0008. The KW2D Smart RFID Reader returns to "operation mode (running)".

## Deleting procedure

- The registration master tag and the deletion master tag cannot be disabled.
- If the number of registered tags exceeds 500, the registered contents of the tags invalidated by the delete operation will be deleted from the tag list.

1 Write 02xxh (xx: Authority) to the holding register 0008.
The KW2D Smart RFID Reader shifts to "tag edit mode (deleting)".

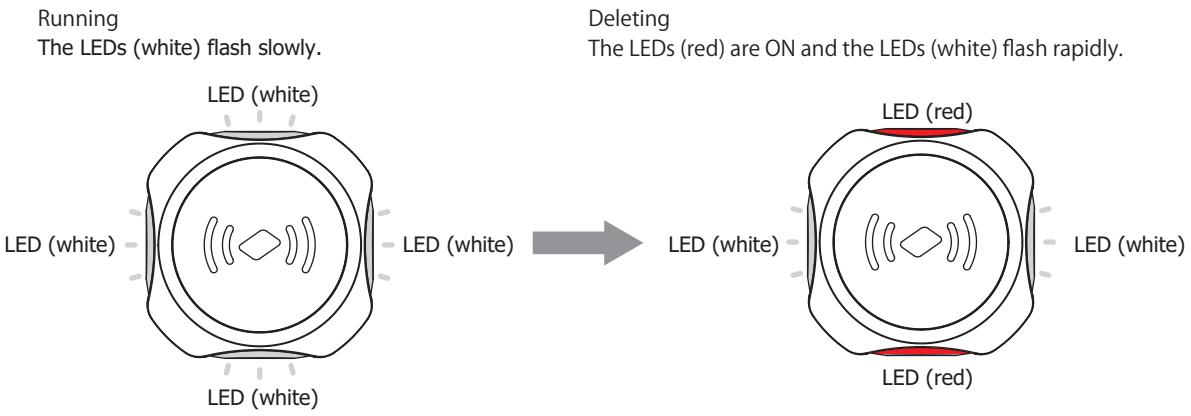


| Buzzer | LED | Status |
|---|---|---|
| None | The LEDs (red) are ON and the LEDs (white) flash rapidly. (100 ms interval) | Waiting to read the tag to disable |

2 Hold up the RFID tags to be disabled one by one for the required number of times.

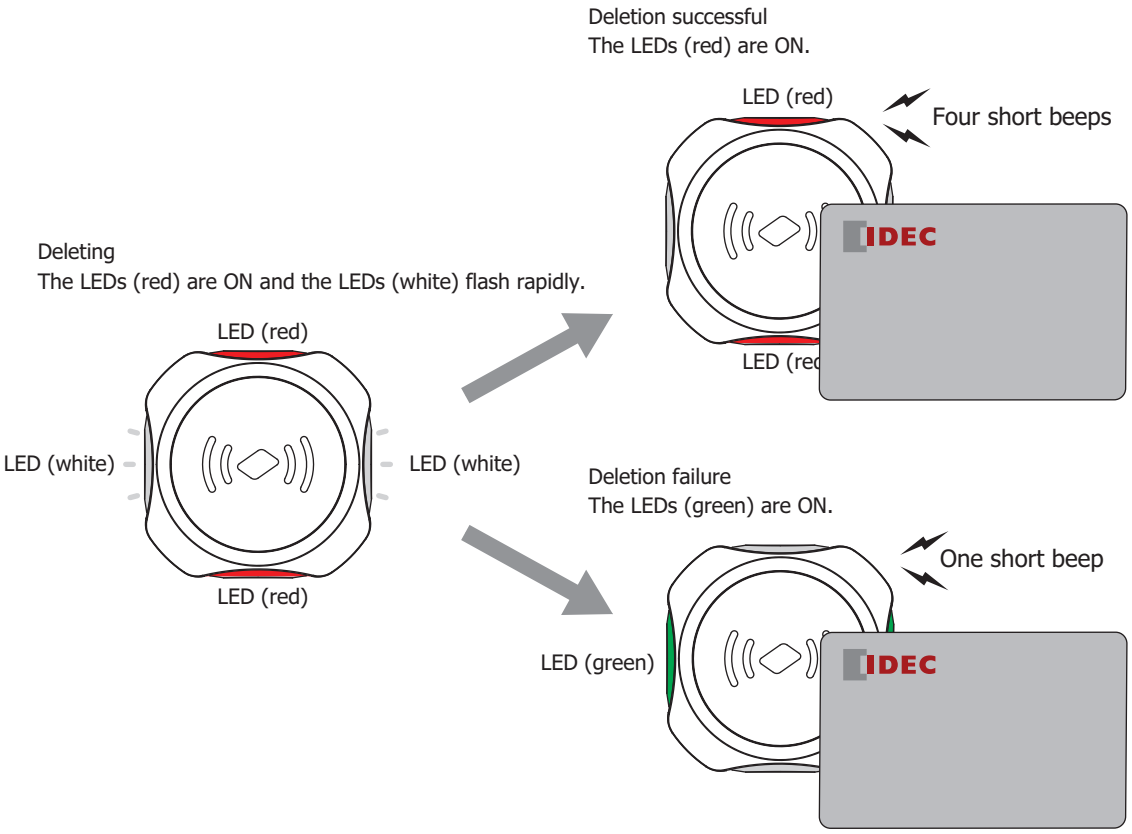


| Buzzer | LED | Status |
|---|---|---|
| Four short beeps | The LEDs (red) are ON. | Deletion successful |
| One short beep | The LEDs (green) are ON. | Deletion failure |

**3** Write 08xxh (xx: Authority) to the holding register 0008.

Disables the RFID tag to be deleted while retaining the tag information in the tag list. When the tag list update is complete, restart the KW2D Smart RFID Reader.

Deleting
The LEDs (red) are ON and the LEDs (white) flash rapidly.

Deletion complete
The LEDs (green) and the LEDs (red) are ON.

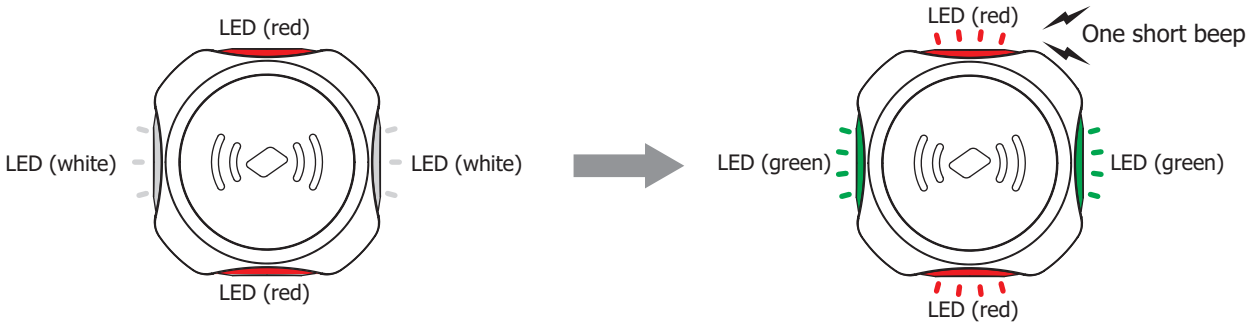


| Buzzer | LED | Status |
|---|---|---|
| One short beep | LEDs (green) and the LEDs (red) are ON. | Completed updating the tag list of the KW2D Smart RFID Reader |

To cancel the deletion of the tag, write 04xxh (xx: Authority) to the holding register 0008. The KW2D Smart RFID Reader returns to "operation mode (running)".

# Chapter 6 KW RFID Configurator

This chapter describes the KW RFID Configurator.

## 1 Overview of the KW RFID Configurator

The KW RFID Configurator is software used to configure settings for KW2D Series Smart RFID Reader and to check its operation.

### 1.1 Operating Environment

The operating environment of the KW RFID Configurator is as follows.

| Item | Description |
|---|---|
| OS | Windows 11, Windows 10 |
| CPU | 1.0 GHz or faster |
| Memory | 1 GB or more |
| Environment | Microsoft .NET Framework 4.8 or higher |

### 1.2 Installing the Software

1. Download the KW RFID Configurator installer from the download site on the IDEC homepage.
2. Double-click the downloaded installer. The installer window is displayed. Install the software by following the on-screen instructions.
   This concludes installing the KW RFID Configurator.

### 1.3 Uninstalling the Software

1. Right the **Start** button and click **Apps and Features**.
   **Apps & features** is displayed.
2. Select "KW RFID Configurator" and click the **Uninstall** button.
   The setup program is started.
3. Click the **Yes** button on the uninstall confirmation message.
   The selected application is deleted.
   This concludes uninstalling the KW RFID Configurator.

### 1.4 Starting and Exiting the Software

- Starting the KW RFID Configurator
  Click the **Start** button, **IDEC RFID Reader**, and then click **KW RFID Confi**gurator.
  This starts the KW RFID Configurator.

  You can also start the KW RFID Configurator by double-clicking its icon on the desktop.

- Exiting the KW RFID Configurator
  Click the X button on the top right corner of the **KW RFID Configurator.**
  This exits the KW RFID Configurator.

# 2 Configuration and Functions

## 2.1 Configuration of the KW RFID Configurator

This chapter describes the names and functions of the elements that make up the KW RFID Configurator.

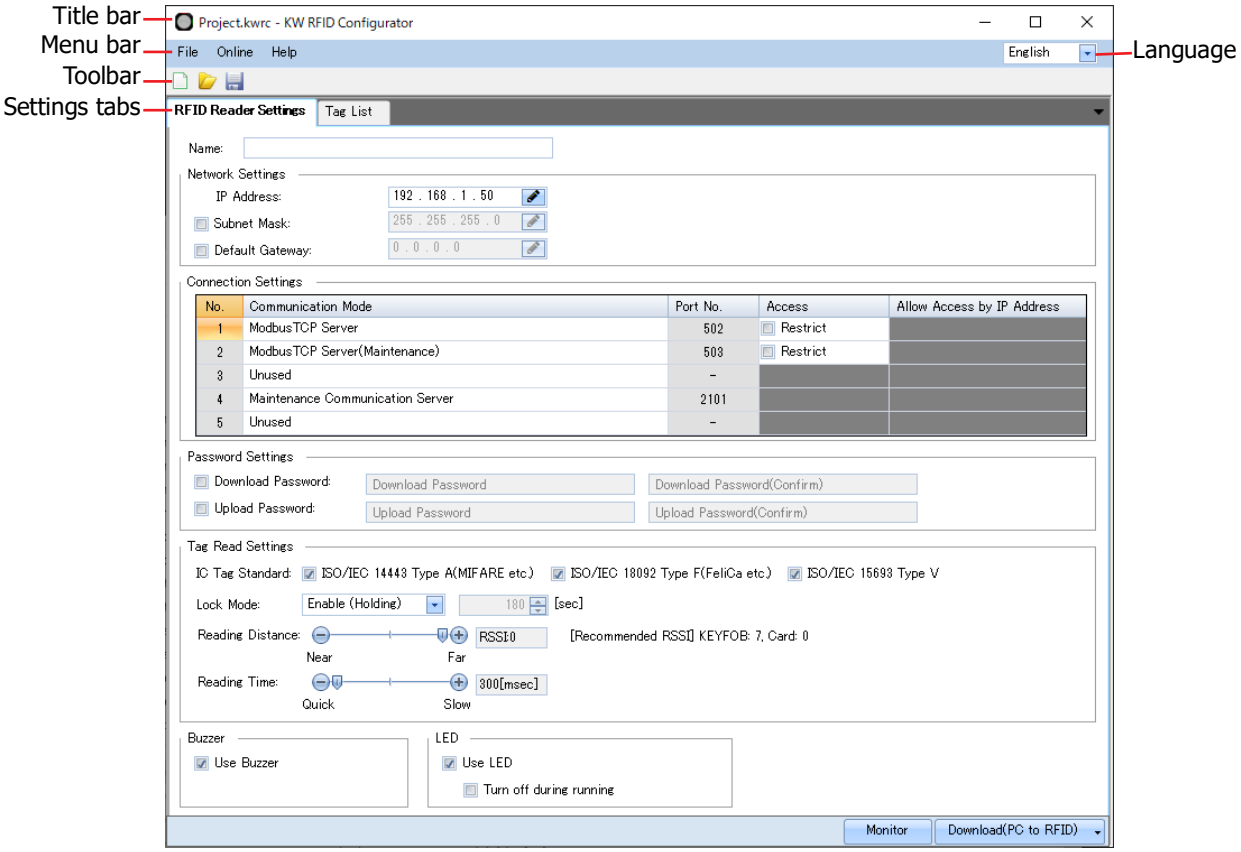


- **Title bar**
  Displays the name of the project being edited and the name of the software "KW RFID Configurator".

- **Language**
  Select the display language of the software from the following.
  "Japanese", "English", or "Chinese"

- **Menu bar**
  Displays commands to create a project and transfer the project to the KW2D Series Smart RFID Reader. For details, refer to "2.2 Menu Bar" on page 6-3.

- **Toolbar**
  Displays command buttons to create a new project, open a project, and save a project. For details, refer to "2.3 Toolbar" on page 6-3.

- **Settings tabs**
  Configures the project of the KW2D Series Smart RFID Reader and sets the authority of RFID tag UIDs. For details, refer to "2.4 Settings Tabs" on page 6-4.

- **Monitor**
  Monitors a KW2D Series Smart RFID Reader. This is the same function as **Online** > **Monitor** on the menu bar. For details, refer to "4.3 Monitor the KW2D Series Smart RFID Reader" on page 6-23.

- **Download (PC to RFID)**
  Downloads the project or tag list only to the KW2D Series Smart RFID Reader. This is the same function as **Online** > **Download** on the menu bar. For details, refer to "4.1 Download project" on page 6-18.

## 2.2 Menu Bar

The commands that can be executed from the menu bar are as follows.

● File

| Command | Description |
|---|---|
| New Project | Creates a new project. |
| Open Project | Opens a created project. |
| Save Project | Saves the project being edited. |
| Save Project As | Saves the project being edited with a new name. |
| Project Property | Configures the properties of the project. |

● Online

| Command | Description |
|---|---|
| Download(PC to RFID) | Downloads the project or tag list only to the KW2D Series Smart RFID Reader. |
| Upload(RFID to PC) | Uploads the project from the KW2D Series Smart RFID Reader. |
| Monitor | Monitors a KW2D Series Smart RFID Reader. |
| Communication Settings | Configures the details of maintenance communication. |
| Reset RFID Reader to factory settings | Resets a KW2D Series Smart RFID Reader to the factory settings. |

● Help

| Command | Description |
|---|---|
| Manual | Displays the included manual (this PDF). |
| Version | Displays version information about the KW RFID Configurator. |

## 2.3 Toolbar

Command buttons to create a new project, open a project, and save a project are located on the toolbar.

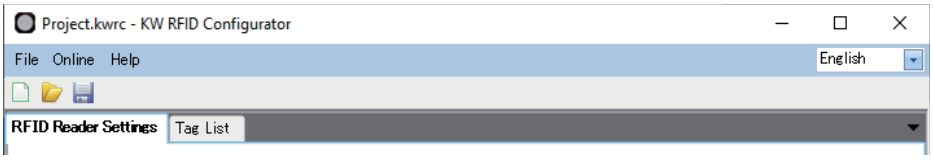


■ **(New Project)**
Creates a new project. For details, refer to "3.1 Creating New Project" on page 6-16.

■ **(Open Project)**
Displays a created project. For details, refer to "3.2 Open Project" on page 6-16.

■ **(Save Project)**
Saves the project being edited.
If a new project was created, the **Save Project As** dialog box is displayed. Enter the file name (*.kwrc) and click the **Save** button to save the project file.

## 2.4 Settings Tabs

Configures the project of the KW2D Series Smart RFID Reader and sets the authority of RFID tag UIDs.

### ● **RFID Reader Settings** Tab

This tab is used to configure the project of the KW2D Series Smart RFID Reader.

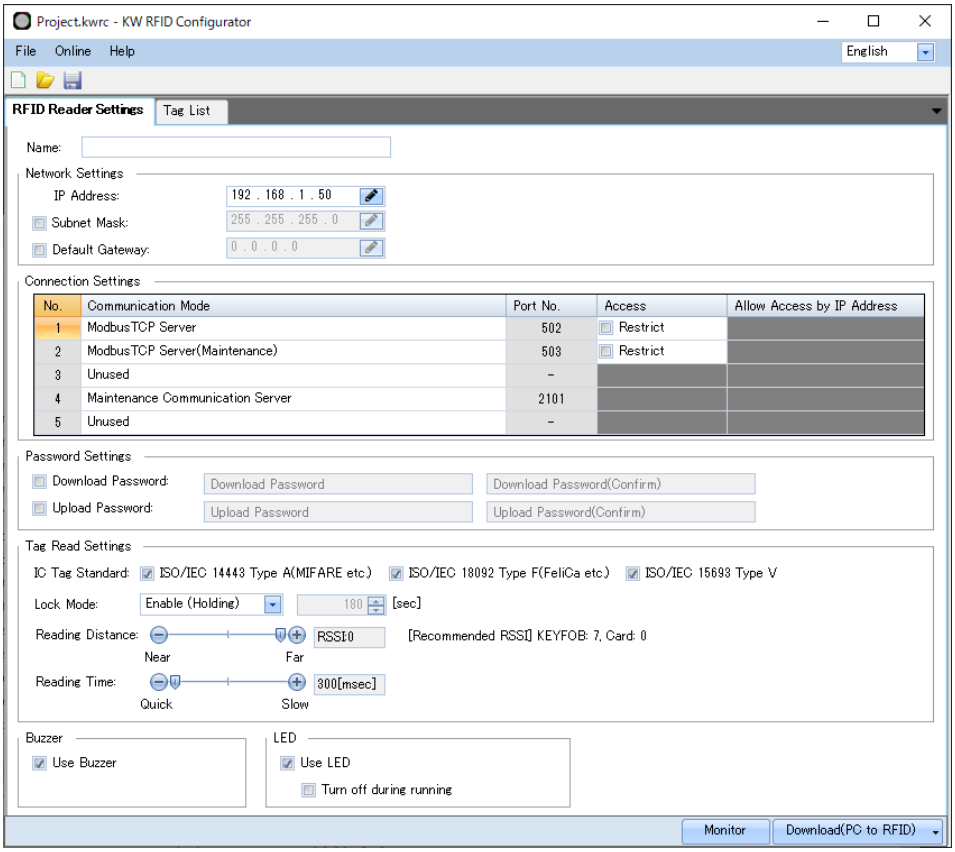


#### ■ **Name**

Enter the name of the KW2D Series Smart RFID Reader. Up to 16 bytes can be set as ASCII characters.

#### ■ **Network Settings**

Sets information for connecting the KW2D Series Smart RFID Reader to a network.

IP Address : Specifies the IP address of the KW2D Series Smart RFID Reader. (The default value is "192.168.1.50")
The input format is "xxx.xxx.xxx.xxx". "xxx" stands for a numeric value from 0 to 255.
Ensure that IP addresses are unique when connecting multiple devices to the same network.

Subnet Mask : To change the subnet mask of the KW2D Series Smart RFID Reader, select this check box and specify the subnet mask.
The input format is "xxx.xxx.xxx.xxx". "xxx" stands for a numeric value from 0 to 255.
Set the same value on all devices. If this check box is cleared, the value is "255.255.255.0".

Default Gateway : To change the default gateway of the KW2D Series Smart RFID Reader, select this check box and specify the default gateway.
The input format is "xxx.xxx.xxx.xxx". "xxx" stands for a numeric value from 0 to 255.
Set this value to use a router. Leave this value blank if not required.

### Connection Settings

Sets the connections to use for the KW2D Series Smart RFID Reader. Selects the Communication Mode from the following.

**ModbusTCP Server**, **EtherNet/IP Adapter**, **CC-Link IE Field Basic Slave**, **Event Transmission(TCP)**, **Event Transmission(UDP)**, **Unused(For Demo)**, **ModbusTCP Server(Maintenance)**, **Maintenance Communication Server**, **Unused**

"Modbus TCP Server" is selected

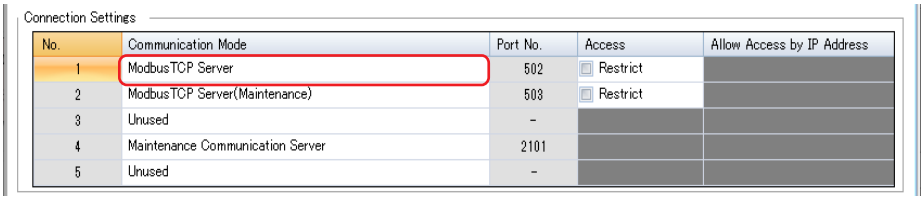


| No. | Communication Mode | Port No. | Description |
|---|---|---|---|
| 1 | Modbus TCP Server | 502 | This is the communication mode for reading the tag information of RFID tags. If the communication is lost for 10 seconds or longer, the red LEDs on the KW2D Series Smart RFID Reader flash.<br>To restrict access to the KW2D Series Smart RFID Reader, select the **Restrict** check box, and then enter the IP address from which access is allowed in the **Allow Access by IP Address** field. |
| 2 | Modbus TCP Server (Maintenance) | 503 | This is used to monitor the status of the KW2D Series Smart RFID Reader on another host device.<br>To restrict access to the KW2D Series Smart RFID Reader, select the **Restrict** check box, and then enter the IP address of the device to which access is allowed in the **Allow Access by IP Address** field. |
| 3 | Unused | - | Do not use this port. |
| | Modbus TCP Server (Maintenance) | 504 | This is used to monitor the status of the KW2D Series Smart RFID Reader on another host device.<br>To restrict access to the KW2D Series Smart RFID Reader, select the **Restrict** check box, and then enter the IP address of the device which is allowed to access in the **Allow Access by IP Address** field. |
| | Event Transmission(TCP) | - | The KW2D Series Smart RFID Reader operates as a client and performs TCP communication with the host device operating as a server.<br>Click **Setting** to display the **Event Transmission(TCP)** dialog box. For details, refer to " Event Transmission(TCP) Dialog Box" on page 6-8. |
| | Event Transmission(UDP) | - | Performs UDP communication with the host device without a connection.<br>Click **Setting** to display the **Event Transmission(UDP)** dialog box. For details, refer to "Event Transmission(UDP) Dialog Box" on page 6-10. |
| 4 | Maintenance Communication Server | 2101 | Use this port to communicate with the KW RFID Configurator. |
| 5 | Unused | - | Do not use this port. |
| | Maintenance Communication Server | 2102 | Use this port to communicate with the KW RFID Configurator. |

"EtherNet/IP Adapter" is selected

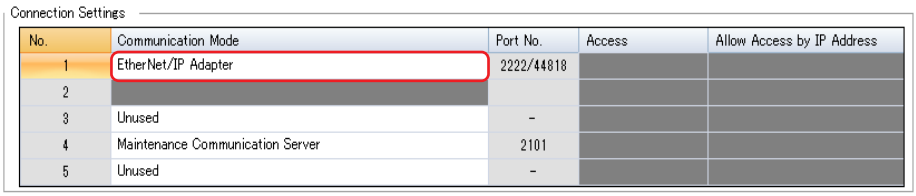


| No. | Communication Mode | Port No. | Description |
|---|---|---|---|
| 1 | EtherNet/IP Adapter | 2222/44818 | The role of communication varies based on the **Port No.**.<br>2222: This is a cyclic (Class1) communication that reads the UID information of RFID tags and the authority information obtained as a result of verification. If communication is lost for 10 seconds or more, the red LED of the KW2D Series Smart RFID Reader will flash.<br>44818: This is a response/request (Class3) communication in which the service requested from the host device (originator) is executed by the target (adapter) device. |
| 2 | - | - | - |
| 3 | Unused | - | Do not use this port. |
| | Modbus TCP Server (Maintenance) | 504 | It is used to monitor the status of the KW2D Series Smart RFID Reader on another host device.<br>To restrict access to the KW2D Series Smart RFID Reader, select the **Restrict** check box, and then enter the IP address from which access is allowed in the **Allow Access by IP Address** field. |
| | Event Transmission(TCP) | - | The KW2D Series Smart RFID Reader operates as a client and performs TCP communication with the host device as a server.<br>Click **Setting** to display the **Event Transmission(TCP)** dialog box. For details, refer to " Event Transmission(TCP) Dialog Box" on page 6-8. |
| | Event Transmission(UDP) | - | Performs UDP communication with the host device without a connection.<br>Click **Setting** to display the **Event Transmission(UDP)** dialog box. For details, refer to "Event Transmission(UDP) Dialog Box" on page 6-10. |
| 4 | Maintenance Communication Server | 2101 | Use this port to communicate with the KW RFID Configurator. |
| 5 | Unused | - | Do not use this port. |
| | Maintenance Communication Server | 2102 | Use this port to communicate with the KW RFID Configurator. |

"CC-Link IE Field Basic Slave" is selected

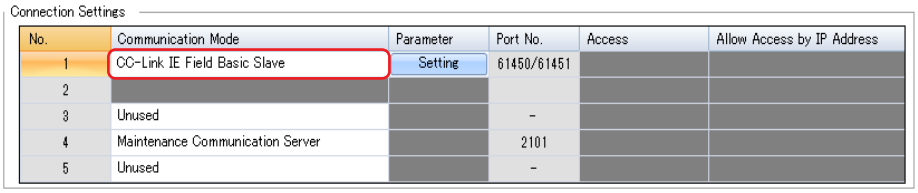


| No. | Communication Mode | Port No. | Description |
|---|---|---|---|
| 1 | CC-Link IE Field Basic Slave | 61450/<br>61451 | The role of communication varies based on the **Port No.**.<br>61450: This is a cyclic communication that reads the UID information of RFID tags and the authority information obtained as a result of verification. If communication is lost for 10 seconds or more, the red LED of the KW2D Series Smart RFID Reader will flash.<br>61451: This is a communication that automatically detects peripherals connected via TCP/IP communication (NodeSearch).<br>Click **Setting** to display the **CC-Link IE Field Basic Slave Settings** dialog box. For details, refer to "CC-Link IE Field Basic Slave Settings Dialog Box" |
| 2 | - | - | - |
| 3 | Unused | - | Do not use this port. |
| | Modbus TCP Server (Maintenance) | 504 | It is used to monitor the status of the KW2D Series Smart RFID Reader on another host device.<br>To restrict access to the KW2D Series Smart RFID Reader, select the **Restrict** check box, and then enter the IP address from which access is allowed in the **Allow Access by IP Address** field. |
| | Event Transmission(TCP) | - | The KW2D Series Smart RFID Reader operates as a client and performs TCP communication with the host device as a server.<br>Click **Setting** to display the **Event Transmission(TCP)** dialog box. For details, refer to " Event Transmission(TCP) Dialog Box" on page 6-8. |
| | Event Transmission(UDP) | - | Performs UDP communication with the host device without a connection.<br>Click **Setting** to display the **Event Transmission(UDP)** dialog box. For details, refer to "Event Transmission(UDP) Dialog Box" on page 6-10. |
| 4 | Maintenance Communication Server | 2101 | Use this port to communicate with the KW RFID Configurator. |
| 5 | Unused | - | Do not use this port. |
| | Maintenance Communication Server | 2102 | Use this port to communicate with the KW RFID Configurator. |

**CC-Link IE Field Basic Slave Settings Dialog Box**

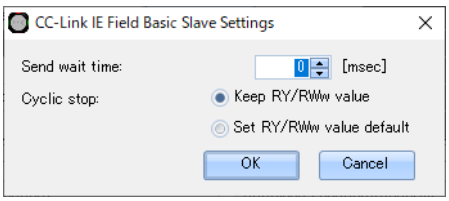


Send wait time: Set the Send wait time (0 to 255 ms).
Cyclic stop: Select the operation of cyclic stop from "Keep RY/RWw value" or "Set RY/RWw value default".

"Event Transmission(TCP) " is selected

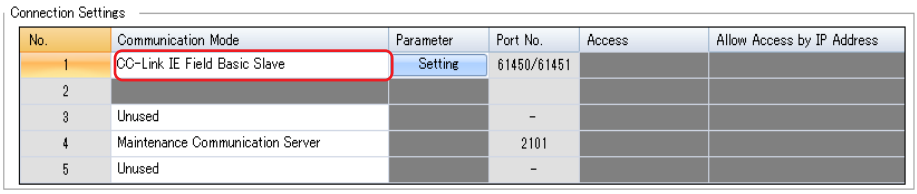


| No. | Communication Mode | Port No. | Description |
|---|---|---|---|
| 1 | Event Transmission(TCP) | - | The KW2D Series Smart RFID Reader operates as a TCP client and performs TCP communication with the host device operating as a TCP server.<br>Click **Setting** to display the **Event Transmission(TCP)** dialog box.<br>For details, refer to " Event Transmission(TCP) Dialog Box" on page 6-8. |
| 2 | - | - | - |
| 3 | Unused | - | Do not use this port. |
| | Modbus TCP Server (Maintenance) | 504 | It is used to monitor the status of the KW2D Series Smart RFID Reader on another host device.<br>To restrict access to the KW2D Series Smart RFID Reader, select the **Restrict** check box, and then enter the IP address from which access is allowed in the **Allow Access by IP Address** field. |
| 4 | Maintenance Communication Server | 2101 | Use this port to communicate with the KW RFID Configurator. |
| 5 | Unused | - | Do not use this port. |
| | Maintenance Communication Server | 2102 | Use this port to communicate with the KW RFID Configurator. |

### Event Transmission(TCP) Dialog Box

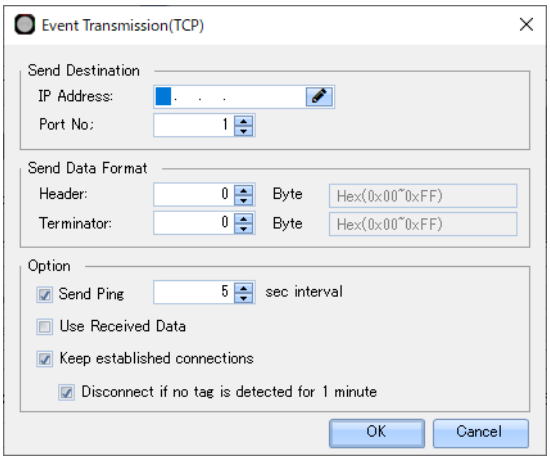


### Send Destination

IP Address: Specifies the IP address of the destination host device for Event Transmission. (Default: blank)
The format is "xxx.xxx.xxx.xxx". "xxx" stands for a numeric value from 0 to 255.
When connecting multiple devices to the same network, make that each device has a unique IP address.

Port No.: Specifies the TCP port number (1 to 65535) of the destination host device for Event Transmission. (Default: 1)

**Send Data Format**

Configure the header and terminator of the send data for Event Transmission.

Header: Set the size and code (00 to FFh) of the header of the send data. The maximum size is 4 bytes.

Terminator: Set the size and code (00 to FFh) of the terminator of the send data. The maximum size is 4 bytes.

For details on the send data, refer to Chapter 4 "Format of Transmission data" on page 4-42.

**Option**

Send Ping: Send a ping to detect host communication errors. This can be set when "Event Transmission(TCP)" is selected as "1" in the No. When this check box is selected, the KW2D Series Smart RFID Reader sends a ping to the destination at the specified interval (1 to 10 seconds). If the Send Ping is not successful for 10 seconds or more, a host communication error will occur and the LED (red) will blink.

For Event Transmission, select the **Send Ping** check box to detect a communication failure with the host device as a host communication error. However, when "Event Transmission(TCP)" is selected, communication errors can be detected while detecting RFID tags even if the **Send Ping** check box is cleared.

Use Received Data: The KW2D smart RFID reader displays the detection result based on the response data from the host device. This can be set when "Event Transmission(TCP)" is selected as "1" in No. When this check box is selected, the host device must return the response data to the KW2D Series Smart RFID Reader within two seconds after receiving the transmitted data. If the KW2D Series Smart RFID Reader does not receive the response data in time, the detection result will be a host communication error.

| Data storage location | Number of bytes | Contents | Description |
|---|---|---|---|
| 1 | 1 | Sequence number | 0 (30h) to 9 (39h), A (41h) to F (46h)<br>Stores the received sequence number. |
| 2 | 1 | Verification result | Reply ACK (06h) or NAK (15h). |

When the Received Data is not used, the judgment criteria changes depending on whether the tag list is present or not.

With tag list: Judge based on UID verification result and connection status

No tag list: Judge based on connection status

Keep established connections: Select this check box to keep the established connection after sending the data. This can be set only when "Event Transmission (TCP)" is selected for "1" or "3" in No.

Disconnect if no tag is detected for 1 minute: Select this check box to disconnect the connection after 1 minute or more without detecting a tag.

If the KW2D Series Smart RFID Reader is restarted while maintaining the connection, it may take some time to reconnect the connection. A host communication error will occur until the connection is reestablished.

"Event Transmission(UDP) " is selected

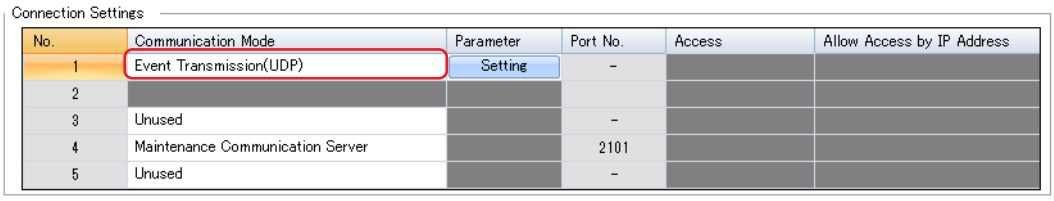


| No. | Communication Mode | Port No. | Description |
|---|---|---|---|
| 1 | Event Transmission(UDP) | - | The KW2D Series Smart RFID Reader operates as a UDP client and performs UDP communication with the host device operating as a UDP server.<br>Click **Setting** to display the **Event Transmission(UDP)** dialog box. For details, refer to "Event Transmission(UDP) Dialog Box" on page 6-10. |
| 2 | - | - | - |
| 3 | Unused | - | Do not use this port. |
| | Modbus TCP Server (Maintenance) | 504 | It is used to monitor the status of the KW2D Series Smart RFID Reader on another host device.<br>To restrict access to the KW2D Series Smart RFID Reader, select the **Restrict** check box, and then enter the IP address from which access is allowed in the **Allow Access by IP Address** field. |
| 4 | Maintenance Communication Server | 2101 | Use this port to communicate with the KW RFID Configurator. |
| 5 | Unused | - | Do not use this port. |
| | Maintenance Communication Server | 2102 | Use this port to communicate with the KW RFID Configurator. |

### Event Transmission(UDP) Dialog Box

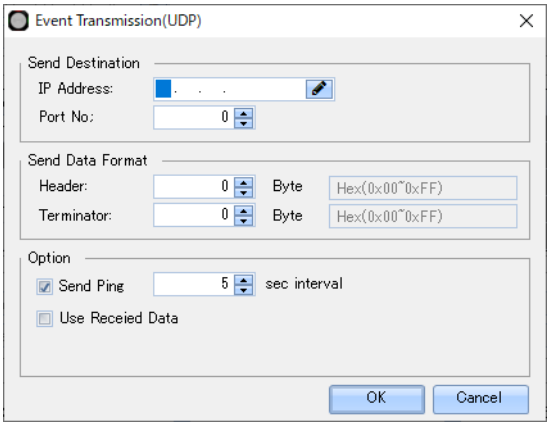


### Send Destination

IP Address: Specifies the IP address of the destination host device for Event Transmission. (Default: blank)
The format is "xxx.xxx.xxx.xxx". "xxx" stands for a numeric value from 0 to 255.
When connecting multiple devices to the same network, make sure to assign each device a unique IP address.

Port No.: Specifies the UDP port number (1 to 65535) of the destination host device for Event Transmission. The port number where the KW2D smart RFID reader receives response data is also the same. (Default: 1)

### Send Data Format

Configure the header and terminator of the send data for Event Transmission.

Header: Set the size and code (00 to FFh) of the header of the send data. The maximum size is 4 bytes.

Terminator: Set the size and code (00 to FFh) of the terminator of the send data. The maximum size is 4 bytes.

For details on the send data, refer to Chapter 4 "Format of Transmission data" on page 4-42.

**Option**

Send Ping: Send a ping to detect host communication errors. This can be set when "Event Transmission(UDP)" is selected as "1" in the No. When this check box is selected, the KW2D Series Smart RFID Reader sends a ping to the destination at the specified interval (1 to 10 seconds). If the Send Ping is not successful for 10 seconds or more, a host communication error will occur and the LED (red) will blink.

For Event Transmission, select the **Send Ping** check box to detect a communication failure with the host device as a host communication error.

Use Received Data: The KW2D smart RFID reader displays the detection result based on the response data from the host device. This can be set when "Event Transmission(UDP)" is selected as "1" in No. When this check box is selected, the host device must return the response data to the KW2D Series Smart RFID Reader within two seconds after receiving the transmitted data. If the KW2D Series Smart RFID Reader does not receive the response data in time, the detection result will be a host communication error.

| Data storage location | Number of bytes | Contents | Description |
|---|---|---|---|
| 1 | 1 | Sequence number | 0 (30h) to 9 (39h), A (41h) to F (46h)<br>Stores the received sequence number. |
| 2 | 1 | Verification result | Reply ACK (06h) or NAK (15h). |

When the Received Data is not used, the judgment criteria changes depending on whether the tag list is present or not.
With tag list: Judge based on UID verification result
No tag list: Always OK judgment

"Unused(For Demo) " is selected

| No. | Communication Mode | Port No. | Description |
|---|---|---|---|
| 1 | Unused(For Demo) | 502 | You can check the operation of the KW2D smart RFID reader without connecting a host device.<br>A host communication error does not occur even if the host device is not connected. The detection result is judged by the verification result with the tag list. |
| 2 | - | - | - |
| 3 | Unused | - | Do not use this port. |
| | Modbus TCP Server (Maintenance) | 504 | It is used to monitor the status of the KW2D Series Smart RFID Reader on another host device.<br>To restrict access to the KW2D Series Smart RFID Reader, select the **Restrict** check box, and then enter the IP address from which access is allowed in the **Allow Access by IP Address** field. |
| | Event Transmission(TCP) | - | The KW2D Series Smart RFID Reader operates as a client and performs TCP communication with the host device as a server.<br>Click **Setting** to display the **Event Transmission(TCP)** dialog box. For details, refer to " Event Transmission(TCP) Dialog Box" on page 6-8. |
| | Event Transmission(UDP) | - | Performs UDP communication with the host device without a connection.<br>Click **Setting** to display the **Event Transmission(UDP)** dialog box. For details, refer to "Event Transmission(UDP) Dialog Box" on page 6-10. |
| 4 | Maintenance Communication Server | 2101 | Use this port to communicate with the KW RFID Configurator. |
| 5 | Unused | - | Do not use this port. |
| | Maintenance Communication Server | 2102 | Use this port to communicate with the KW RFID Configurator. |

## Password Settings

Download Password: Select this check box to password protect downloading the project to the KW2D Series Smart RFID Reader.

- Download Password: Enter the password. The entered characters are masked with * (asterisks).
  The length of the password is 8 to 16 characters. Only single-byte alphanumeric characters and symbols can be used.
  The password can be set only when the **Download Password** check box is selected.
- Download Password (Confirm): Enter the same password that you entered in **Download Password**.

Upload Password: Select this check box to password protect uploading the project from the KW2D Series Smart RFID Reader.

- Upload Password: Enter the password. The entered characters are masked with * (asterisks).
  The length of the password is 8 to 16 characters. Only single-byte alphanumeric characters and symbols can be used.
  The password can be set only when the **Upload Password** check box is selected.
- Upload Password (Confirm): Enter the same password that you entered in **Upload Password**.

Manage the passwords appropriately so that third parties do not know them. If you forget the download password, use the **Reset RFID Reader to factory settings** function in the KW RFID Configurator to reset the RFID reader. The project saved in the KW2D Series Smart RFID Reader will be deleted and the settings will be reset to the factory settings. For details, refer to "RFID Reader List Dialog Box" on page 6-20.

## Tag Read Settings

IC Tag Standard: Select the check boxes of the IC tag standards to read with the KW2D Series Smart RFID Reader.
"ISO/IEC 14443 Type A(MIFARE etc.)", "ISO/IEC 18092 Type F(FeliCa etc.)", "ISO/IEC 15693 Type V"

Lock Mode: Specify the operation after the KW2D Series Smart RFID Reader reads the RFID tag from the following.

- Disable: It does not enter "lock mode (locking)". If you keep holding an RFID tag, the "operation mode" and "detection mode" will be repeated.
- Enable (Holding): When you hold an RFID tag for 1.5 seconds or longer, it will be in "Lock mode (locking)", and when you release the RFID tag, the locking operation will be released.
- Enable (Time): Hold an RFID tag to enter "lock mode (locking)". The lock operation is released when the specified time (1 to 28,800 seconds) elapses from the time when the RFID tag is released. If you hold the same tag again before the specified time elapses, the lock operation will be released at that point.

Reading Distance: Specify the distance at which the KW2D Series Smart RFID Reader can read RFID tags in 8 steps by sliding the slider or clicking ⊖/⊕.
The RSSI value (0 to 7) of each specified step is displayed to the right of the slider.
The RSSI value indicates the received signal strength, which is the signal strength when the KW2D Series Smart RFID Reader reads the RFID tag. An RSSI value of 7 (near) means the strongest signal strength and a value of 0 (far) means the weakest signal strength. The signal strength becomes smaller the further the distance between the KW2D Series Smart RFID Reader and RFID tag. For this reason, the KW2D Series Smart RFID Reader controls the distance between the RFID reader and RFID tag by judging the detection of the RFID tag only when the RSSI value is greater than or equal to the set RSSI value.
For example, when the RSSI value is 7 (received signal strength: maximum), reading signal strengths lower than 7 is abandoned.

Reading Time : Specify the response time to read the RFID tag in 10 steps by sliding the slider or clicking ⊖/⊕.
The time (300 to 3000 ms in increments of 300 ms) of each specified step is displayed to the right of the slider.

When "Enable(time)" is selected in Lock Mode, the lock operation time starts counting down after an RFID tag is held on the KW2D Series Smart RFID Reader and then released.

■ **Buzzer**

Use Buzzer: Select this check box to sound the buzzer according to the operation of the KW2D Series Smart RFID Reader.

When the power is turned on or restarted, the buzzer operates even if the **Use Buzzer** check box on the RFID Reader Settings tab is cleared.

■ **LED**

Use LED: Select this check box to turn on or flash the LEDs according to the operation of the KW2D Series Smart RFID Reader.

Turn off during running: Select this check box to turn off the LED during running in operation mode or matching RFID tags in detection mode.

When the power is turned on or restarted, the LED operates even if the **Use LED** check box on the RFID Reader Settings tab is cleared.

● **Tag List** Tab

This tab is used to batch manage the tags used with the KW2D Series Smart RFID Reader on the tag list.
The **Tag List** tab is common regardless of the Communication Mode (Modbus TCP Server, EtherNet/IP Adapter, CC-Link IE Field Basic Slave, Event Transmission) selected in **Connection Settings** on the **RFID Reader Settings** tab.

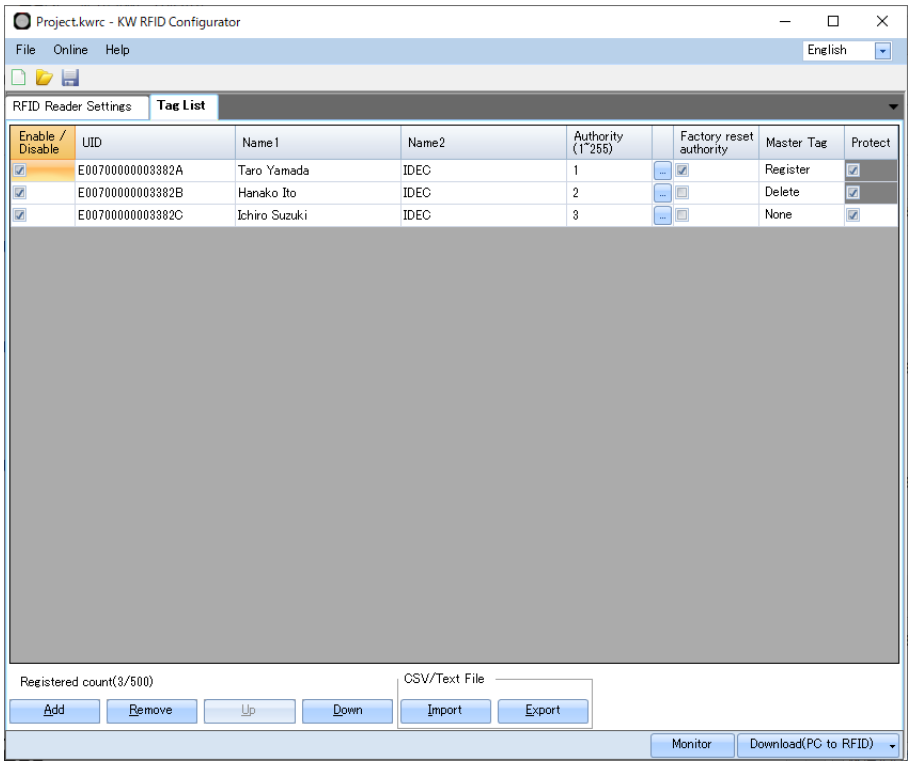


■ **Enable/Disable**

Select this check box to enable the RFID tag.

All RFID tag settings are downloaded to the KW2D Series Smart RFID Reader regardless of the status of the **Enable/Disable** check boxes.

■ **UID**

Enter the UID of the RFID tag. The UID can be entered up to 20 digits only with characters that can be used as hexadecimal digits.
If the number of digits is odd, "0" is added to the end of the UID to make the number of digits even.

Be careful not to enter duplicate UIDs. If you enter a UID that is already registered, an error message is displayed and that UID cannot be registered.

- **Name1, Name2**
  Enter any name freely. The maximum length is 18 bytes.
  The character encoding set for **Character Code of Tag List** on the **Project Property** dialog box is used. If there are characters that cannot be converted, those characters are displayed as "?". For details, refer to "3.5 Changing Project Properties" on page 6-17.

- **Authority (1 to 255)**
  Enter the number corresponding to the authority (1 to 255) for the UID. When you click ..., the **Authority** dialog box will be displayed, and the set authority is shown in bit format as the state of the check boxes corresponding to the bit values. The set authority is displayed in bit format. Assigning the devices to control to each bit makes the authority easier to use.
  For example, when the authority is 3, the value is "00000011" in binary. Select the D1 and D2 check boxes.

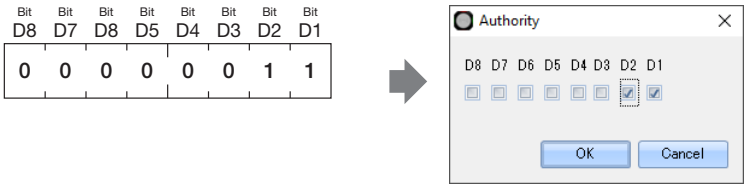


When you change the state of the check box in the **Authority** dialog box and click **OK** button to close it, the permissions changes.

- **Factory reset authority**
  An RFID tag set with factory reset authority is used when resetting the KW2D Series Smart RFID Reader in situations such as when the download password is forgotten. Select this check box to set the authority to allow the KW2D Series Smart RFID Reader to be reset. The RFID tag can be used to reset the KW2D Series Smart RFID Reader in situations such as when the download password is forgotten.

When the Download Password or Upload Password is set, always select the **Factory reset authority** check box for one or more RFID tags.
An error will occur when downloading the project to the KW2D Series Smart RFID Reader if the **Factory reset authority** check box is cleared for all RFID tags.

- **Master Tag**
  Select the function for the selected UID used as a master tag.

  Register: When this RFID tag is held on the KW2D Series Smart RFID Reader, the KW2D Series Smart RFID Reader will be "Tag Edit mode (Registering)", and the UID of the RFID tag held next is registered in the KW2D smart RFID reader.

  Delete: When this RFID tag is held on the KW2D Series Smart RFID Reader, the KW2D Series Smart RFID Reader will be "Tag Edit mode (Deleting)", and the UID of the RFID tag held next will be invalidated in the tag list.

  None: Not used as a master tag.

- **Protect**
  Select this check box to protect the tag information from the operation of registering and editing tag information by the master tag or shared memory. The UID set to "Register" or "Delete" in Master Tag is always protected.

- **Registered count**
  Displays the number of registered RFID tags.

- **Add button**
  Adds an RFID tag to the list. A maximum of 500 RFID tags can be added.

- **Remove button**
  Deletes the selected RFID tag from the list.

- **Up button**
  Moves the selected RFID tag up in the list.

- **Down button**
  Moves the selected RFID tag down in the list.

- **Import button**
  Select the exported tag list file (CSV format or Unicode text format) and click **Open** to overwrite the tag list with the selected file at once.

- **Export button**
  The **Save Project As** dialog box is displayed.
  Select the location to save the file, enter a file name, and then click the **Save** button. The tag list being edited is saved as CSV format or Unicode text format.
  The saved tag list can be imported with the **Import** button.

# 3 Projects

Use KW RFID Configurator to configure KW2D Series Smart RFID Reader settings and create a tag list. A project is the general term for the created KW2D Series Smart RFID Reader settings and tag list to which UIDs and authorities are registered.

## 3.1 Creating New Project

Creates a new project.

From the **File menu**, click **New Project**.

A confirmation message is displayed if the project being edited is not saved.
- Click **Yes** to save the project, and then create a new project.
- Click **No** to discard the changes to the project and create a new project without saving the project.
- Click **Cancel** to return to the KW RFID Configurator without saving the project.

## 3.2 Open Project

Opens a created project.

1. From the **File** menu, click **Open Project**.
   The **Open** dialog box is displayed.
2. Select the project file (*.kwrc) and click **Open**.

- A confirmation message is displayed if the project being edited is not saved.
  - Click **Yes** to save the project, and then display the **Open** dialog box.
  - Click **No** to discard the changes to the project and display the **Open** dialog box without saving the project.
  - Click **Cancel** to return to the KW RFID Configurator without saving the project.
- If a project password is set, the **Confirm Password** dialog box is displayed. Enter the password and click the **OK** button. The project password is set on the **Project Property** dialog box. For details, refer to "3.5 Changing Project Properties" on page 6-17.
- A project created with a new version of the KW RFID Configurator cannot be opened with an old version of the software.

## 3.3 Saving project

Saves the project being edited.

From the **File** menu, click **Save Project**.

When new project is created and you*1 have never save it, the **Save As** dialog box is displayed.

## 3.4 Saving project as

Saves the project being edited with a new name.

1. From the **File** menu, click **Save Project As**.
   The **Save As** dialog box is displayed.
2. Enter the file name (*.kwrc) and click **Save**.

## 3.5 Changing Project Properties

Configures the project password and character encoding for the tag list.

1 From the **File** menu, click **Project Property**.
The **Project Property** dialog box is displayed.

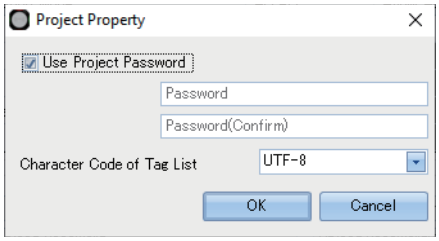


- **Use Project Password**
  Select this check box to password protect access to the project file.
  The **Confirm Password** dialog box is displayed when you select a password-protected project in the **Open Project** from the File menu.

- **Password**
  Enter the password. The entered characters are masked with * (asterisks).
  The length of the password is 8 to 16 characters. Only single-byte alphanumeric characters and symbols can be used.
  The password can be set only when the **Use Project Password** check box is selected.

  Manage the password appropriately so that third parties do not know it. If you forget the password to a project, you can no longer open that project file.

- **Password(Confirm)**
  Enter the same password that you entered in **Password**.
  This option can only be set when the **Use Project Password** check box is selected.

- **Character Code of Tag List**
  Select the character encoding that is used in the tag list from the following.
  "UTF-8", "ASCII", "Japanese (Shift-JIS)", "Chinese (GB2312)", or "European (ISO 8859-1)"

  If there are characters in the tag list that cannot be converted using the selected character encoding, those characters are displayed as "?".

2 Change each setting as necessary and then click **OK**.

# 4 Online

## 4.1 Download project

● Download all project settings

1 From the **Online** menu, under **Download(PC to RFID)**, click **All Settings**, or click **Download(PC to RFID)** button at the bottom right of KW RFID Configurator, and then click **All Settings**.
The **Download(PC to RFID)** dialog box is displayed.

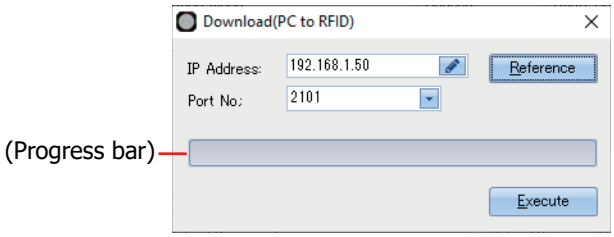


- **IP Address**
  Specifies the IP address of the target KW2D Series Smart RFID Reader.
- **Port No.**
  Select the port number of the target KW2D Series Smart RFID Reader from "2101" or "2102".
- **Reference button**
  The **RFID Reader List** dialog box is displayed. Specify the IP address of the target KW2D Series Smart RFID Reader with the **RFID Reader List** dialog box. For details, refer to "RFID Reader List Dialog Box" on page 6-20.
- **(Progress bar)**
  Displays the progress of the download.
- **Execute button**
  Executes the download of the project.

**2** Change each setting as necessary and then click **Execute**.

Downloads the project.

- If the system software versions between KW2D Series Smart RFID Reader and KW RFID Configurator are different, a confirmation message will be displayed.
  - Click **Yes** to update the system software of the KW2D Series Smart RFID Reader and download the project.
  - Click **No** to stop updating the system software of the KW2D Series Smart RFID Reader and downloading the project.
  - Click **Cancel** to stop updating the system software of the KW2D Series Smart RFID Reader, and return to the KW RFID Configurator.
- If a download password was set for the KW2D Series Smart RFID Reader project, the **Confirm Password** dialog box is displayed. Enter the password and click the **OK** button. If the passwords match, download the project. For the download password, refer to "Password Settings" on page 6-12.
- If the IP address of the KW2D Series Smart RFID Reader connected by the Ethernet cable is not in the same subnet as the computer running KW RFID Configurator, you must set an IP address in the same subnet for the computer. The KW RFID Configurator has a function to add an IP address in the same subnet as the KW2D Series Smart RFID Reader to the computer.
  Click **Yes** in the following confirmation message for adding an IP address. The confirmation message for changes to the device is displayed.

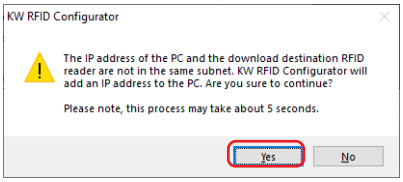


Click **Yes** in the following device change confirmation message. The IP address is added to your computer, and an informational message for the added IP address is displayed.

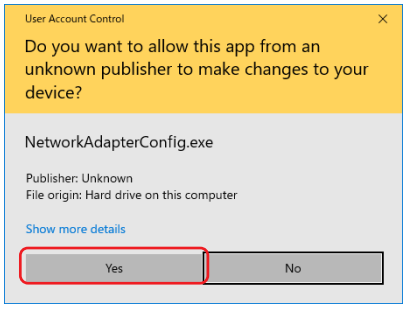


Click the **OK** on the informational message to download the project.

● **RFID Reader List** Dialog Box

This dialog box is used to manage the KW2D Series Smart RFID Readers that connect to the computer over maintenance communication.

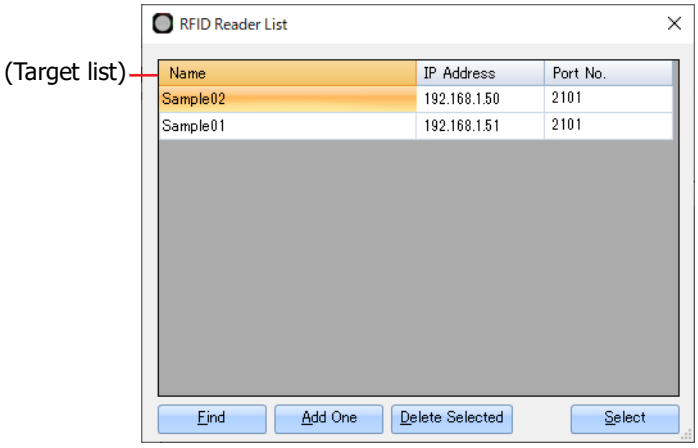


■ **(Target list)**

Displays the list of target KW2D Series Smart RFID Readers.

Name: Displays the name of the KW2D Series Smart RFID Reader. To change the name, enter the new name when the cell is selected.

IP Address: Displays the IP address of the KW2D Series Smart RFID Reader. To change the IP address, enter the new IP address when the cell is selected.

Port No.: Displays the port number of the KW2D Series Smart RFID Reader. To change the port number, click the cell when selected, and then select the port number from "2101" or "2102".

■ **Find button**

Searches for KW2D Series Smart RFID Reader on the same network that can be connected to the computer over maintenance communication.
Information on KW2D Series Smart RFID Readers that were found is added to the target list. A maximum of 250 devices can be added.

■ **Add One button**

Adds a target KW2D Series Smart RFID Reader to the target list.
A new row is added to the target list. Set the name, IP address, and port number. A maximum of 250 devices can be added.

■ **Delete Selected button**

Deletes a target KW2D Series Smart RFID Reader from the target list.

■ **Select button**

Returns to the original dialog box and registers the KW2D Series Smart RFID Reader selected in the target list.

● Download only the tag list of the project

1 From the **Online** menu, under **Download(PC to RFID)**, click **Tag List Only**, or click **Download(PC to RFID)** button at the bottom right of KW RFID Configurator, and then click **Tag List Only**.
The **Tag List Download (PC to RFID)** dialog box is displayed.

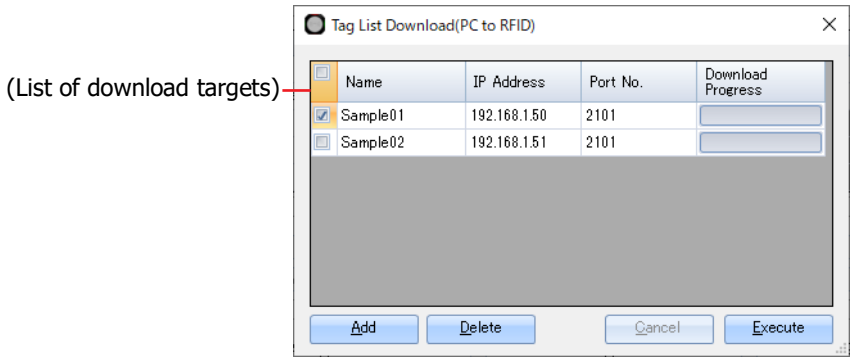


The tag list can be batch downloaded to multiple KW2D Series Smart RFID Readers (250 maximum).

■ **(List of download targets)**
Displays the list of target KW2D Series Smart RFID Readers.

(**Download target** check box): Select this check box to download the tag list to the corresponding KW2D Series Smart RFID Reader. Click the check box in the title row to select or clear all check boxes.

Name: Displays the name of the KW2D Series Smart RFID Reader.

IP Address: Displays the IP address of the KW2D Series Smart RFID Reader.

Port No.: Displays the port number of the KW2D Series Smart RFID Reader.

Download Progress: Displays the progress of the download.
"Completed" is displayed when the download finishes normally. "Failed" is displayed when the download finishes with an error.

■ **Add button**
Adds a KW2D Series Smart RFID Reader to the list of download targets.
The **RFID Reader List** dialog box is displayed. Specify the IP address of the target KW2D Series Smart RFID Reader with the **RFID Reader List** dialog box. For details, refer to "RFID Reader List Dialog Box" on page 6-20.

■ **Delete button**
Deletes the selected KW2D Series Smart RFID Reader from the list of download targets.

■ **Cancel button**
Cancels the download of the tag list and returns to the KW RFID Configurator.

■ **Execute button**
Executes the download of the tag list.

2 Change each setting as necessary and then click **Connect**.

## 4.2 Upload Project

Uploads a project from the KW2D Series Smart RFID Reader to a computer.

1 From the Online menu, click **Upload(RFID to PC)**.
The **Upload(RFID to PC)** dialog box is displayed.

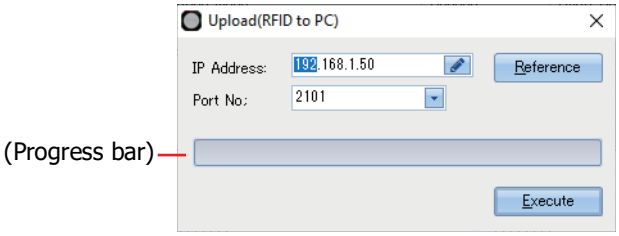


- **IP Address**
  Specifies the IP address of the source KW2D Series Smart RFID Reader.
- **Port No.**
  Select the port number of the source KW2D Series Smart RFID Reader from "2101" or "2102".
- **Reference button**
  The **RFID Reader List** dialog box is displayed. Specify the IP address of the source KW2D Series Smart RFID Reader with the **RFID Reader List** dialog box. For details, refer to "RFID Reader List Dialog Box" on page 6-20.
- **(Progress bar)**
  Displays the progress of the upload.
- **Execute button**
  Executes the upload of the project.

If an upload password was set for the KW2D Series Smart RFID Reader project, the **Confirm Password** dialog box is displayed. Enter the password and click the **OK** button. The upload will start only if the password matches. For details on the upload password, refer to "Password Settings" on page 6-12.

2 Change each setting as necessary and then click **Connect**.

## 4.3 Monitor the KW2D Series Smart RFID Reader

1 From the Online menu, click **Monitor**.
The **RFID Reader Monitor** dialog box is displayed.

(List of tag information)

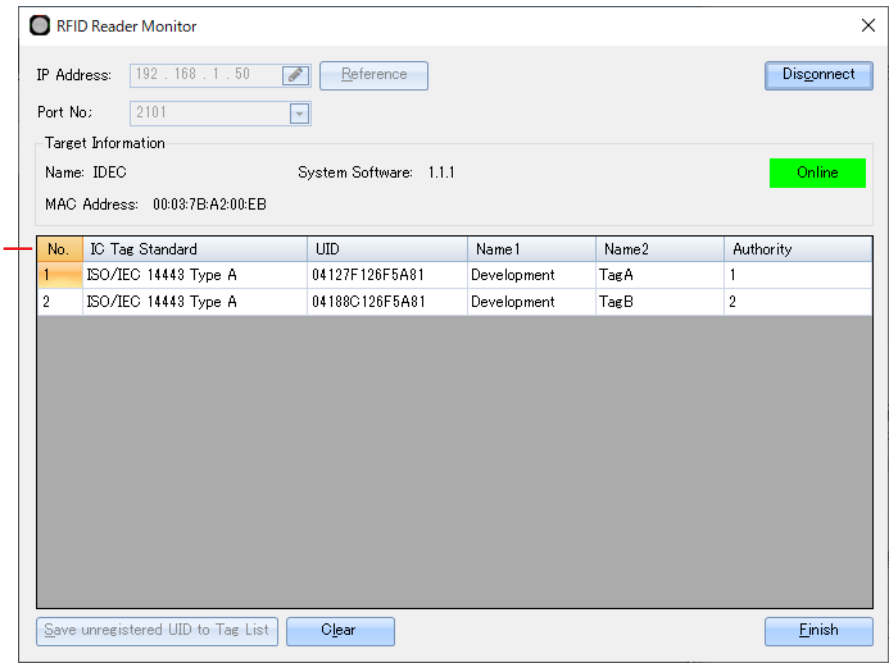


- **IP Address**
  Specifies the IP address of the KW2D Series Smart RFID Reader to monitor.
- **Port No.**
  Select the port number of the KW2D Series Smart RFID Reader to monitor from "2101" or "2102".
- **Reference button**
  The **RFID Reader List** dialog box is displayed. Specify the KW2D Series Smart RFID Reader to monitor with the **RFID Reader List** dialog box. For details, refer to "RFID Reader List Dialog Box" on page 6-20.
- **Connect/Disconnect button**
  Connects or disconnects the KW2D Series Smart RFID Reader to monitor.
  The **IP Address**, **Port No.**, and **Reference** buttons are disabled while the KW2D Series Smart RFID Reader is connected.

- When connecting to a KW2D Series Smart RFID Reader, monitoring will start if the KW RFID Configurator tag list and the tag list in the KW2D Series Smart RFID Reader are the same. If the KW RFID Configurator tag list and the tag list in the KW2D Series Smart RFID Reader are different, a confirmation message will be displayed.
  - Click **Yes** to upload the tag information from the tag list in the KW2D Series Smart RFID Reader and then connect to it.
  - Click **No** to connect to the KW2D Series Smart RFID Reader without uploading the tag information from the tag list in the KW2D Series Smart RFID Reader. However, it is recommended to perform the upload before monitoring.
  - Click **Cancel** button to return to the **RFID Reader Monitor** dialog box without starting monitoring.
- When connecting to a KW2D Series Smart RFID Reader, if previously read tag information exists in the tag list, a confirmation message is displayed.
  - Click **Yes** to discard tag information and connect.
  - Click **No** to connect while retaining tag information.
- While in the monitoring, the detection result is verified as "normal" or "verification error" even if there is no communication with the host device. Registration can be done smoothly without waiting for three seconds while in the monitoring.

- **Target Information**

  Displays information on the KW2D Series Smart RFID Reader to monitor.

  | | |
  |---|---|
  | Name: | Displays the name of the KW2D Series Smart RFID Reader. |
  | System Software: | Displays the System Software version of the KW2D Series Smart RFID Reader. |
  | MAC Address: | Displays the MAC address of the connected KW2D Series Smart RFID Reader. |
  | Online/Offline: | Displays the connection status between the KW RFID Configurator and the KW2D Series Smart RFID Reader. |

- **(List of tag information)**

  Displays the list of tag information read by the KW2D Series Smart RFID Reader. A maximum of 50 items of tag information can be displayed. Tag information is not displayed for the 51st and subsequent items.

  | | |
  |---|---|
  | No.: | Displays the number (1 to 50) of the tag information that was read. |
  | IC Tag Standard: | Displays the RFID tag standard of the tag information that was read. |
  | UID: | Displays the UID of the tag information that was read. |
  | Name1: | Displays the Name1 of the tag information that was read. |
  | Name2: | Displays the Name2 of the tag information that was read. |
  | Authority: | Displays the authority of the tag information that was read. "Unregistered" is displayed if the authority was not registered. |

  You can edit **Name1** and **Name2**. When the UID is read after changing the name, the changed name will be displayed instead of the name obtained from the KW2D Series Smart RFID Reader. (The changed name is applied to all the tag information having the same UID.) If the changed UID also exists in the tag list, the change is also applied to the name of the tag list.

- **Save unregistered UID to Tag List button**

  Registers UIDs with **Authority** set to **Unregistered** to the tag list of the project being edited.
  A confirmation message is displayed.
  Click **Yes** to disconnect the KW2D smart RFID reader and register the UID in the tag list.
  Click **No** to return to the **RFID Reader Monitor** dialog box without registering the UID.

- **Clear button**

  Deletes the tag information read from the KW2D Series Smart RFID Reader from the list of tag information.

- **Finish button**

  Closes the **RFID Reader Monitor** dialog box and returns to the KW RFID Configurator.

2 Change each setting as necessary and then click **Connect**.

## 4.4 Configure the communication settings of the computer that uses KW RFID Configurator

This dialog box is used to configure the timeout used in maintenance communication and the network adapter in the computer that is used.

1 From the **Online** menu, click **Communication Settings**.
The **Communication Settings** dialog box is displayed.

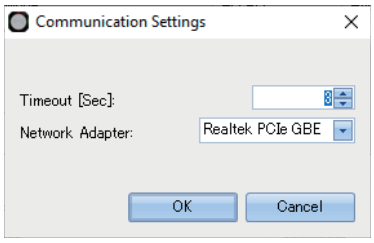


- **Timeout**
  Sets the timeout used in maintenance communication (3 to 10 sec).
- **Network Adapter**
  Select the network adapter in the computer that is used. Only enabled network adapters are displayed. Disabled network adapters, such as those not connected with an Ethernet cable, are not displayed.

2 Change each setting as necessary and then click **OK**.
This concludes configuring the communication settings of the computer.

## 4.5 Initialize the KW2D Smart RFID Reader

This dialog box is used to initialize the KW2D Series Smart RFID Reader to the factory settings.

1 From the **Online** menu, click **Reset RFID Reader to factory Settings**.
The **Reset RFID Reader to factory Settings** dialog box is displayed.

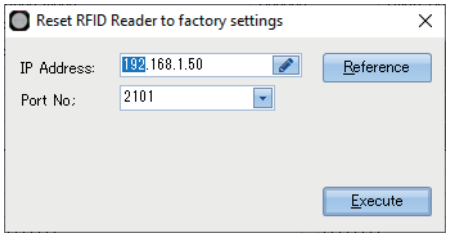


- **IP Address**
  Specifies the IP address of the KW2D Series Smart RFID Reader to reset to the factory settings.
- **Port No.**
  Select the port number of the KW2D Series Smart RFID Reader to reset to the factory settings from "2101" or "2102".
- **Reference button**
  The **RFID Reader List** dialog box is displayed. Specify the KW2D Series Smart RFID Reader to reset to the factory settings with the **RFID Reader List** dialog box. For details, refer to "RFID Reader List Dialog Box" on page 6-20.
- **Execute button**
  Executes the reset of the KW2D Series Smart RFID Reader.

**2** Change each setting as necessary and then click **Connect**.

A confirmation message is displayed. Hold an RFID tag with factory reset authority up to the KW2D Series Smart RFID Reader to reset within 30 seconds.

- If an RFID tag set with factory reset authority is recognized, a message asking to perform the initialization is displayed. Click the **OK** button within 3 sec.
- If an RFID tag set with factory reset authority is not recognized, a reset failed message is displayed. Click the **OK** button. You are returned to the **Reset RFID Reader to factory settings** dialog box without resetting the RFID reader. For details on factory reset authority, refer to "Factory reset authority" on page 6-14.

If you download a project to the KW2D Series Smart RFID Reader and change its IP address, the computer may no longer recognize the KW2D Series Smart RFID Reader, depending on the operating environment. The KW2D Series Smart RFID Reader is recognized by waiting briefly before making the connection or by disconnecting and then reconnecting the Ethernet cable connected to the computer.

# 5 Help

## 5.1 Opening the manual

Displays the included manual (PDF).

From the Help menu, click **Manual**.
The KW2D Series Smart RFID Reader User's manual (PDF) is displayed.

## 5.2 Checking the KW RFID Configurator Version Number

Displays version information and update history of KW RFID Configurator and system software.

1 From the Help menu, click **Version**.
The version number of KW RFID Configurator is displayed.

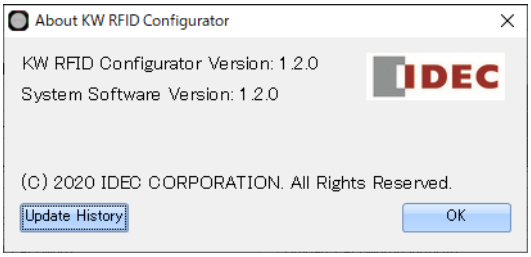


- **KW RFID Configurator Version**
  The version number of KW RFID Configurator is displayed.
- **System Software Version**
  The version number of the system software included in KW RFID Configurator is displayed.
- **Update History**
  Displays the update history (PDF) of KW RFID Configurator and system software.

2 Click **OK**.

Close the **About KW RFID Configurator** dialog box.
This concludes confirming the version information.

# Chapter 7 Troubleshooting

This chapter describes how to investigate and resolve problems that occur on the KW2D Series Smart RFID Reader.

## 1 Check status

The status of the KW2D Series Smart RFID Reader can be confirmed by the LED display and the values of the input relays.

### 1.1 LED

The display of each LED and the status of the KW2D Series Smart RFID Reader are as follows.

| LED (red) | LED (white) | LED (green) | Status of the KW2D Series Smart RFID Reader |
|---|---|---|---|
| Off | Off | Off | Stopped |
| | Flashing (1 second intervals) | Off | Running |
| | On | Off | Detection mode (Detecting RFID tags) |
| | Flashing (100 ms intervals) | Off | Detection mode (Matching RFID tags) |
| | Off | On | Result OK |
| | Off | Flashing (250 ms intervals) | Lock mode (During lock operation) |
| | Off | Flashing (100 ms intervals) | Lock mode (canceling the lock operation) |
| | Flashing (100 ms intervals) | On | Tag edit mode (Registering) |
| On | Off | On | Initializing |
| | Off | Off | Verification error<br>The tag information from the host device is read and verified, and the result is "Mismatch." |
| | Flashing (100 ms intervals) | On | Tag edit mode (Deleting) |
| Flashing (100 ms intervals) | - | Off | Host communication error<br>Tag information cannot be read from the host device. |
| Flashing (500 ms intervals) | Off | Flashing (500 ms intervals) | Downloading project |

### 1.2 Input Relays

| Address No. | Description | Explanation |
|---|---|---|
| 0001 | Verification result | When the result of RFID tag UID verification is "Match," the value of this bit is 1. After the period for retaining the detection result (up to 3 seconds), this bit will be 0. |
| 0002 | | When the result of RFID tag UID verification is "Mismatch," the value of this bit is 1. After the period for retaining the detection result (up to 3 seconds), this bit will be 0. |
| 0003*1 | Host communication | Indicates the communication status with the host device.<br>0: Normal (Communicating), 1: Communication Error (No communication) |
| 0004 | Project | Indicates whether the KW2D Series Smart RFID Reader has a project.<br>0: Exists, 1: Not exists |
| 0005 | Tag list | Indicates whether the KW2D Series Smart RFID Reader has a tag list.<br>0: Exists, 1: Not exists |

*1 Only when the "Modbus TCP Server" is selected as the **Communication Mode** on the "1" in the **No**. For details, refer to Chapter 6 "Modbus TCP Server" is selected on page 6-5.

# 2 Troubleshooting

This section describes how to investigate and resolve problems that occur when using the KW2D Series Smart RFID Reader.

| Symptom | Cause | Action |
|---|---|---|
| The buzzer does not operate. | The **Use Buzzer** check box on **RFID Reader Settings** tab of KW RFID Configurator is cleared. | Select the **Use Buzzer** check box. |
| | | If the Use Buzzer check box is selected but the buzzer do not ring, set the values of coil relays 0009 and 0010 (Enable manual control of buzzer) to 1. If the buzzer operates, there is no problem with the buzzer. |
| The LEDs do not turn on or flash. | The **Use LED** check box on **RFID Reader Settings** tab of KW RFID Configurator is cleared. | Select the **Use LED** check box. |
| | | If the Use LED check box is selected but the LEDs do not turn on or flash, set the values of coil relays 0011 to 0016 (Enable manual control of LEDs) to 1. If the LEDs turn on, there is no problem with the LEDs. |
| Cannot communicate with KW RFID Configurator. | The IP address you are trying to access from the computer does not match the IP address of the KW2D Series Smart RFID Reader. | Directly connect the computer and KW2D Series Smart RFID Reader with an Ethernet cable, search the KW2D Series Smart RFID Reader with the KW RFID Configurator, and then check the IP address set in it. |
| | After the IP address of the KW2D Series Smart RFID Reader is changed, the computer may not recognize the KW2D Series Smart RFID Reader or it may take some time until it is recognized. | Wait before reconnecting or disconnect and then reconnect the Ethernet cable connected to the computer. |
| Cannot communicate with host devices | The IP address of the KW2D Series Smart RFID Reader is unknown. | Directly connect the computer and KW2D Series Smart RFID Reader with an Ethernet cable. Use the search function in KW RFID Configurator to find the KW2D Series Smart RFID Reader. Finally, communicate with the RFID reader using the IP address that was detected. |
| Cannot communicate over Modbus TCP. | **Communication Mode** is set to "Unused" for the port number you are trying to access under **Connection Settings** on the **RFID Reader Settings** tab. | Select "Modbus TCP Server(Maintenance)" and check communication. |
| | The **Restrict** check box is selected for the port number you are trying to access under **Connection Settings** on the **RFID Reader Settings** tab. | Clear the **Restrict** check box under **Access** and check communication. |
| The LEDs (red) are flashing. | Host communication is interrupted for more than 10 seconds | Check if a communication error occurred on the host device side. |

| Symptom | Cause | Action |
|---|---|---|
| RFID tags cannot be detected. | The IC tag standard of the RFID tag is not supported. | RFID tags with unsupported IC tag standards cannot be used. |
| | IC tag standards are restricted. | Select the **IC Tag Standard** check boxes to read with the KW2D Series Smart RFID Reader under **Tag Read Settings** on the **RFID Reader Settings** tab. |
| | The RFID tag signal strength is weak. | Click ⊕ for **Reading Distance** under **Tag Read Settings** on the **RFID Reader Settings** tab and set the RSSI value to 0 (far).<br>Also make adjustments to **Reading Time**. For details, refer to Chapter 6 "Tag Read Settings" on page 6-12. |
| | RFID tags are overlapping or multiple tags are near the front unit. | Keep tags that should not be read 15 cm or more from the front unit. |
| | There is a device nearby causing electromagnetic interference. | Do not install the KW2D Series Smart RFID Reader near devices that cause electromagnetic interference (examples include electric motors, magnetic valves, and solenoids). |
| | Metal or a metallic film sticker is applied to RFID tag. | Check if foreign objects are attached to the RFID tag. |
| An error occurs in RFID tag verification. | The RFID tag is not registered. | Connect to the KW2D Series Smart RFID Reader with the monitor function and check the authority of the RFID tag. For details, refer to Chapter 6 "Save unregistered UID to Tag List button" on page 6-24. |
| The value of the input relay 0004 is 1. | No project is downloaded to the KW2D Series Smart RFID Reader. | Download the project to the KW2D Series Smart RFID Reader. For details, refer to Chapter 6 "4.1 Download project" on page 6-18. |
| The value of the input relay 0005 is 1. | A tag list is not downloaded to the KW2D Series Smart RFID Reader. | To perform RFID tags verification with a KW2D smart RFID reader, download the tag list to the KW2D Series Smart RFID Reader. For details, refer to Chapter 6 "4.1 Download project" on page 6-18. |
| KW RFID Configurator does not start. | The computer does not satisfy the specifications for the operating environment. | KW RFID Configurator can be used on Windows 11 and Windows 10. |
| The characters in the tag list of a CSV file (.csv) imported with KW RFID Configurator are garbled. | The character encoding of the imported tag list is different from the character encoding of the operating system. | A tag list exported with KW RFID Configurator is encoded using the character encoding of the version of Windows that is used. To import the file, use a computer with the same language settings as the computer that exported the file.<br>To export and import tag lists between operating systems with different languages, select Unicode text (.txt) when exporting the tag list. |

- If the password for the project file created in KW RFID Configurator is lost, no method to learn the password set for the project file is provided. Please manage the password appropriately so that third parties do not know it.
  - Project Password
  - Download Password
  - Upload Password
- To remove the password, the KW2D Series Smart RFID Reader must be reset to the factory default settings. For details, refer to Chapter 6 "Factory reset authority" on page 6-14.

# Index


## A

About the Warranty of the Products .....P-6
Adjusting the RFID Tag Detection Sensitivity ..... 5-10
Applicable Wire and Specifications ..... 3-14

## C

CC-Link IE Field Basic Communication (Slave station) 4-33
CC-Link IE Field Basic Communication Shared Memory
.....4-33
CC-Link IE Field Basic Slave Settings Dialog Box .....6-7
Changing Project Properties ..... 6-17
Check status .....7-1
Checking the KW RFID Configurator Version Number
.....6-27
Coil Relay ..... 5-15
Configure the communication settings of the computer
that uses KW RFID Configurator ..... 6-25
Creating New Project ..... 6-16

## D

Detection Mode .....5-3
Dimensions .....2-7
Download project ..... 6-18
Drilling the Mounting Hole .....3-8

## E

Electrical Specifications .....2-2
Environmental Specifications
KW2D Series Smart RFID Reader .....2-1
KW2D Special Tag .....2-4
Ethernet Communication Specifications .....2-3
EtherNet/IP Communication (Adapter) ..... 4-13
EtherNet/IP Communication Shared Memory ..... 4-14
Event Transmission (TCP, UDP) ..... 4-42
Event Transmission(TCP) Dialog Box .....6-8
Event Transmission(UDP) Dialog Box ..... 6-10

## F

Front cover .....2-8

## H

Help ..... 6-27
Holding Register ..... 5-16
How to attach the wire ..... 3-10
How to install
Back unit .....3-3
Front cover .....3-5
How to mount to a panel .....3-6
How to remove
Back unit .....3-2
Front cover .....3-4
How to remove the wire .....3-11

## I

Initialize the KW2D Smart RFID Reader .....6-25
Input register .....5-18
Input relay .....5-18
Installation and Wiring Precautions .....3-1
Installation Space .....3-1
Installing the Software .....6-1
Introduction to the KW RFID Configurator .....1-6
Introduction to the KW2D Series Smart RFID Reader
.....1-1

## K

KW2D Series Smart RFID Reader .....2-1
KW2D Series Smart RFID Reader Functions .....1-4
KW2D Series Smart RFID Reader Statuses and Operations
.....5-1
KW2D Special Tag .....1-2, 2-4

## L

LED .....7-1
Lock Mode .....5-8
LSI list of Operation-confirmed tags .....2-4

## M

Main unit .....1-1, 2-7
Maintenance Communication (Server) .....4-45
Mechanical Specifications .....2-2
Menu Bar .....6-3
Modbus TCP Communication (Server) .....4-1
Modbus TCP Communication Shared Memory .....4-6
Monitor the KW2D Series Smart RFID Reader .....6-23

## O

Open Project .....6-16
Operation Mode .....5-1

## P

Pausing the lock operation .....5-9
Power Supply .....3-9
Power Supply Terminal Wiring .....3-9
Power Supply Voltage .....3-9
Precautions When Crimping Wires .....3-13

## R

Read UID Function .....1-4
Recommended Tools .....3-15
Regarding Laws and Compatible Standards .....P-4
Requirements for each standard .....P-5
RFID Interface Specifications .....2-3
RFID Reader List Dialog Box .....6-20
RFID Reader Settings Tab .....6-4
RFID tags .....2-8

## S

SAFETY PRECAUTIONS .....P-1
Saving project .....6-16
Saving project as .....6-16
Shared Memory .....5-11
Memory Assignment for I/O message communication .
.....4-19
Modbus TCP Communication Shared Memory .....4-6
Memory allocation for cyclic transmission .....4-35
System Configuration .....1-5

## T

Tag list editing function .....1-4
Tag List Tab .....6-13
Terminals .....3-12
Toolbar .....6-3
Troubleshooting .....7-2
Type Numbers .....1-1
Type Numbers and Functions List .....1-2

## U

UID Verification Function .....1-4
Uninstalling the Software .....6-1
Unlock operation .....5-9
Upload Project .....6-22
Use Project Password .....6-17

## W

Wire Size and Recommended Ferrules .....3-14
Wiring Directions and Panel Indicators .....3-16

# IDEC CORPORATION

**Head Office** 6-64, Nishi-Miyahara-2-Chome, Yodogawa-ku, Osaka 532-0004, Japan

**www.idec.com**

| | | | | | | | |
|---|---|---|---|---|---|---|---|
| **USA** | IDEC Corporation | **Singapore** | IDEC Izumi Asia Pte. Ltd. | **China** | IDEC (Shanghai) Corporation | **Japan** | IDEC Corporation |
| **EMEA** | APEM SAS | **Thailand** | IDEC Asia (Thailand) Co., Ltd. | | IDEC Izumi (H.K.) Co., Ltd. | | |
| | | **India** | IDEC Controls India Private Ltd. | **Taiwan** | IDEC Taiwan Corporation | | |


Specifications and other descriptions in this manual are subject to change without notice.
Information in this manual is current as of October, 2024.
2020 IDEC Corporation, All Rights Reserved.

B-2163(6)