RoHS compliant

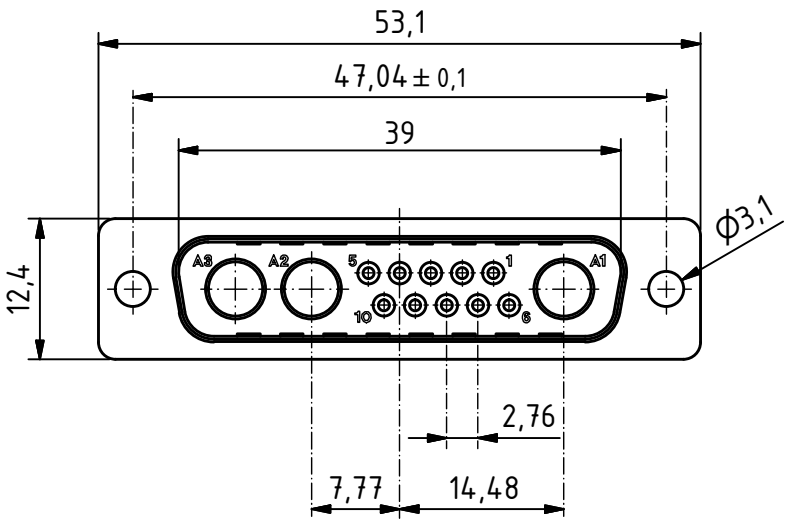

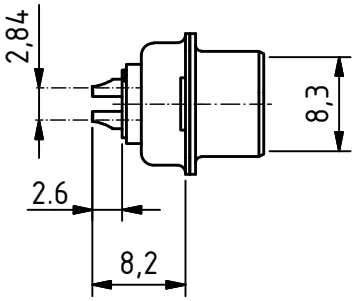

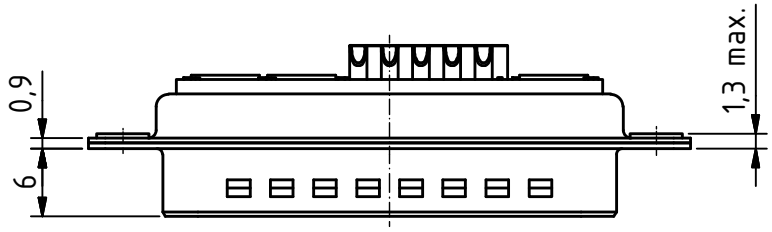

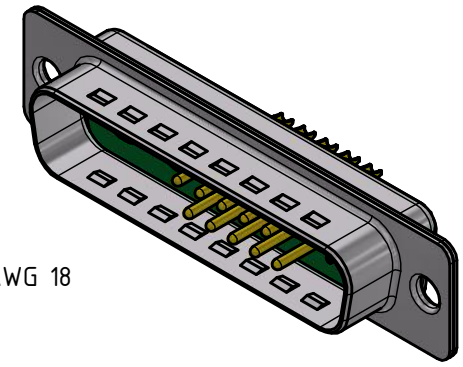

suitable for cable AWG 18

General tolerances (Deltron standard)				
size in mm	> 0.5 up to 3	> 3 up to 6	> 6 up to 30	> 30 up to 120
tolerances	±0.1	±0.2	±0.2	±0.3

MATERIALS
- Insulator: Thermoplastic UL 94-V-0 green
- Contact: Machined / Copper alloy
- Contact finish: Quality class 2
- Shell: steel tin plated

CHARAKTERISTICS
- Working voltage: 125V
- Current rating: 7.5A/xxA
- Contact resistance: max. 10mΩ - DIN41652
- Insulation resistance: >5GΩ
- Temperature range: -55° to +125°C

modification	Rev.	Rev.	Rev.	DE001947 part no.
	Rev.	Rev.	Rev.	

DTS13W3PZ/2	1.5:1 scale	drawn	31.03.2008	mr
		checked		
		approved		

DELTRON SWISS CONNECT 2 CUSTOMIZE

Industrie Neuhof 8c
CH-3422 Kirchberg
www.d-sub.swiss

K051092
drawing no.

Plotdate: 21.11.2018 13:08:38