Rating	3A 12V DC	Mounting Hole	Circuit Diagram
Contact Resistance	50m ohm Max.	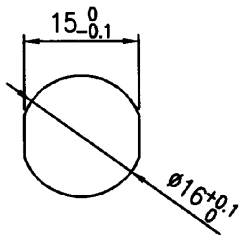	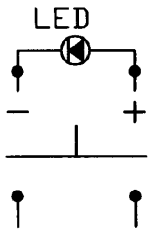
Insulation Resistance	DC 500V 100M ohm Min.		
Dielectric Strength	AC 1500V 1 minute		
Operation Tempture	-20°C~85°C		
Switch Function	4P SPST OFF-ON (LED independent)		

Material:
Frame: Nylon#66+30%GF, Black
Actuator: PC, Red
Printed: None

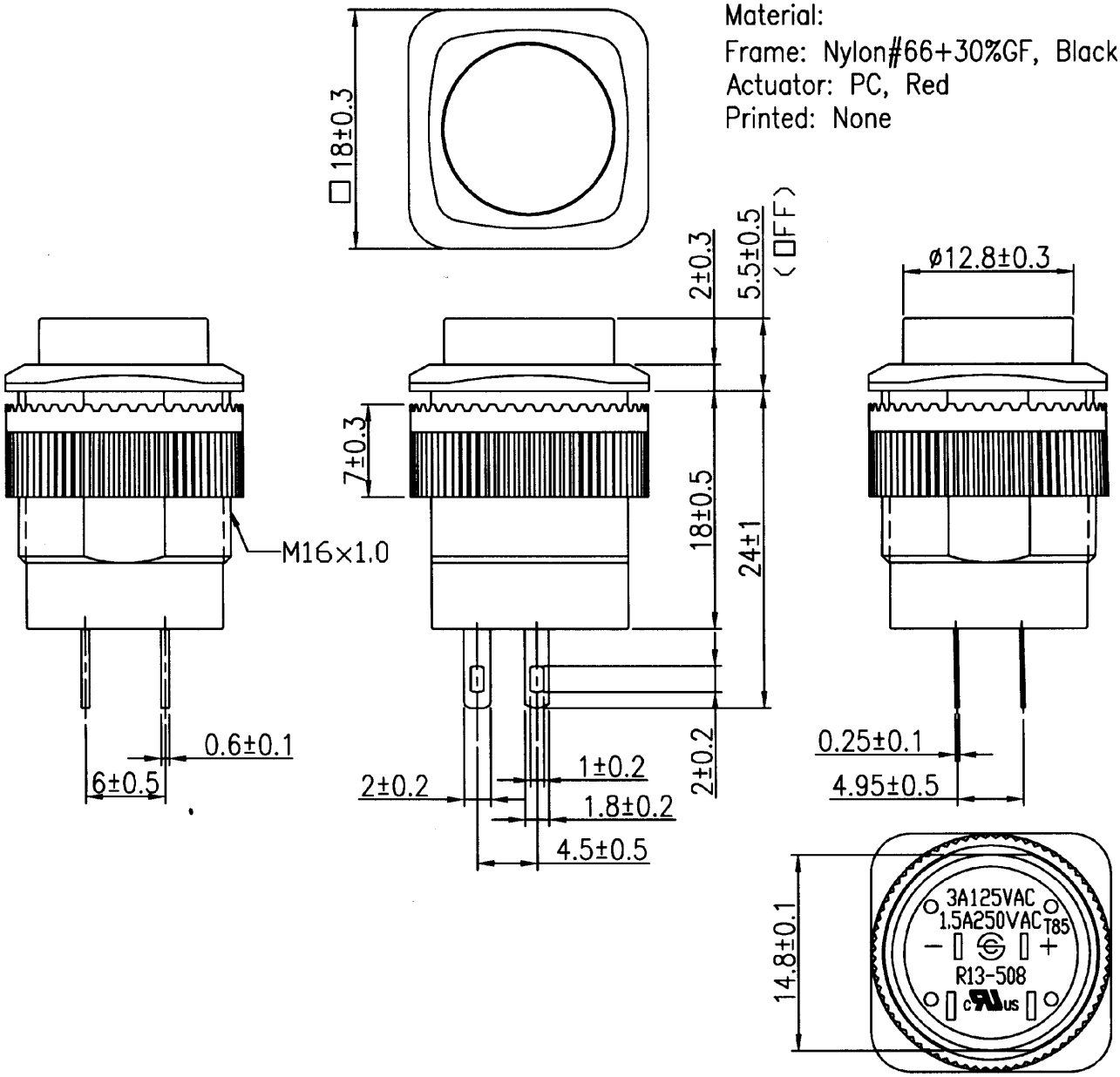

							△
							△
Date	Name	Description					NO
Drawn	Checked	Approved	SCI BOM NO.	1830189	Model Name	PUSH SWITCH	
歐陽安	楊孟		Customer No.		Model No.	R13-508BL-05	REV.
03/31/'10	03/31/10		Unit	mm			X0