Alle Rechte vorbehalten/ *All rights reserved*

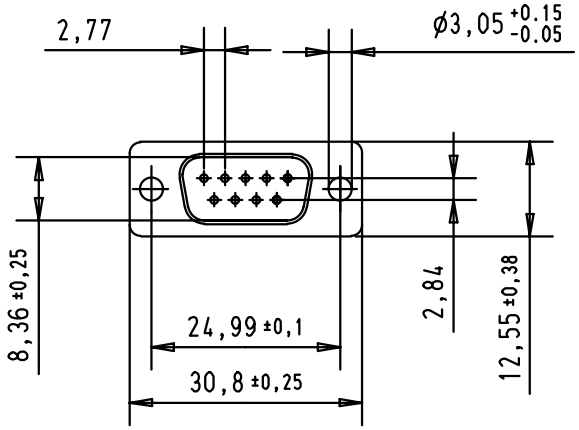

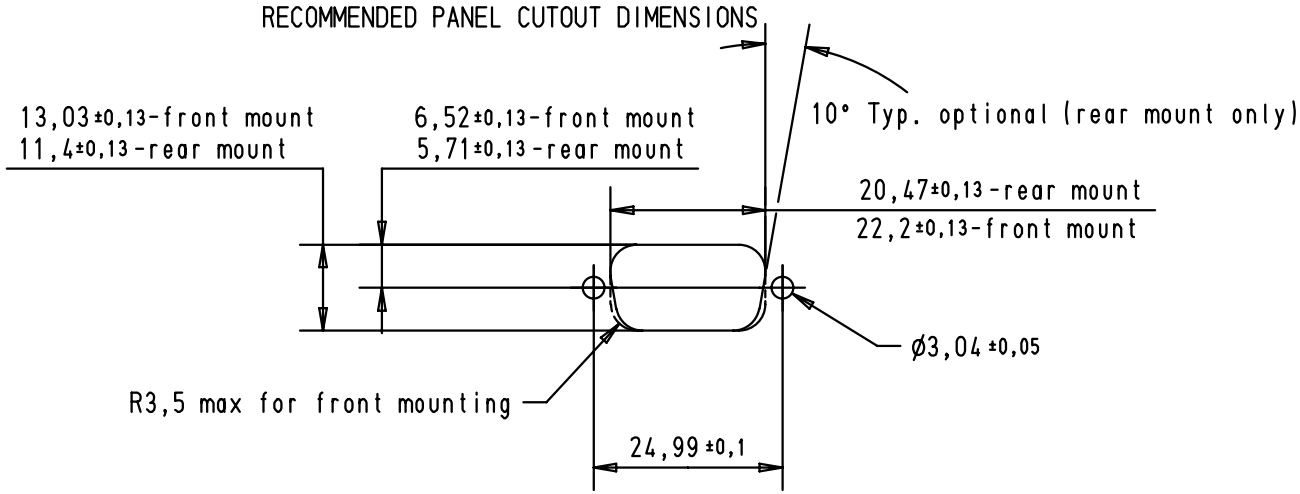

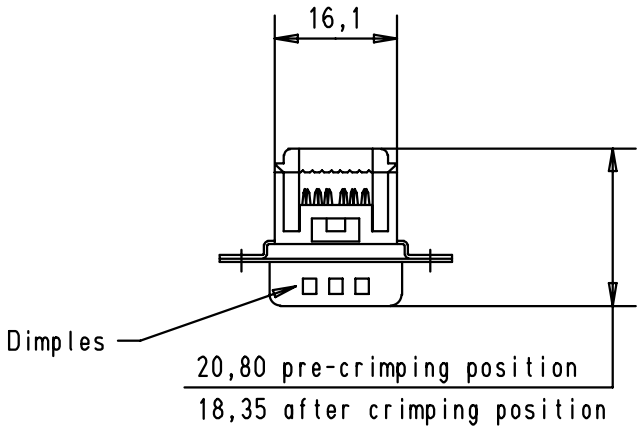

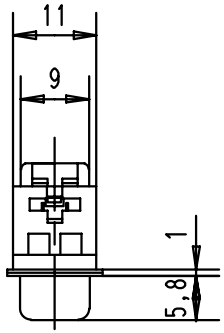

1.27 mm pitch flat cable stranded, wire sizes : AWG 26 to 28

part number	No of contact	performance level	
09 66 128 7700	9	3	
09 66 128 6700	9	2	
09 66 128 5700	9	0.76 µm Au	

Mod.	Dat.	Name
29771	16-APR-02	CV
29756	19-MAR-02	CV
29692	03-JUL-01	SH

	Dat.	Name
Detail.	03-JUL-01	SH
Insp.		
Stand.		

All Dim. in mm
Orig. Size DIN A 4

HARTING ELEKTRONIK
F-95972 Paris

D-Sub male connector
Insulation displacement termination through holes fixing

Maßstab/ *Scale* 1 : 1

TB 0966 128 x700

Sub.

Blatt/ *Page* 1