GB

230V 3mm

PLANER

57564 - P900D82 SPARE PARTS DRAWING

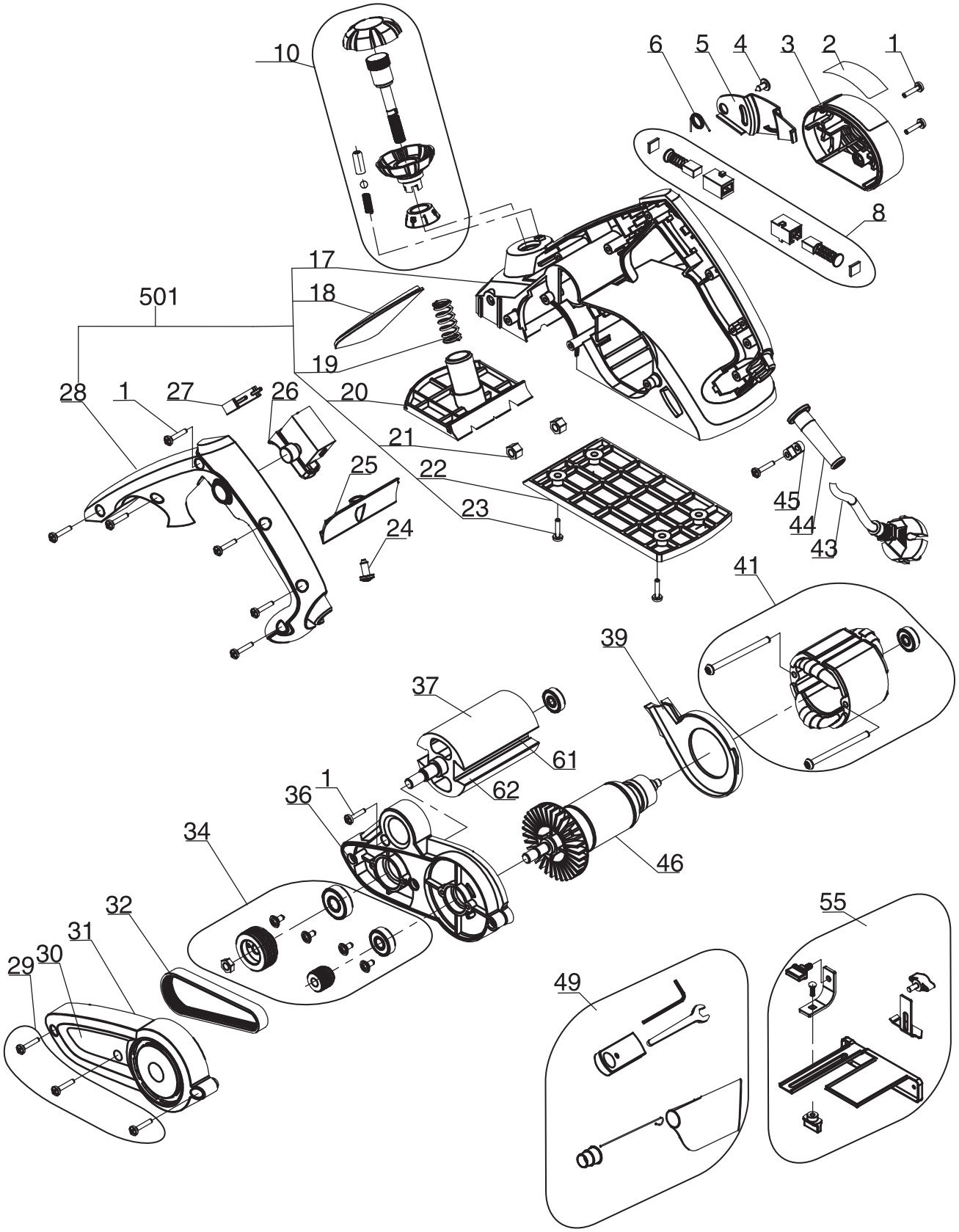

Helpline: +44 (0) 23 8049 4344 Sales Desk: +44 (0) 23 8049 4333 General Enquiries: +44 (0) 23 8026 6355 internet: drapertools.com email: sales@drapertools.com

Draper Tools Limited, Hursley Road, Chandler's Ford, Eastleigh, Hampshire. SO53 1YF UK.

DRAPER®

GB

230V 3mm

PLANER

57564 - P900D82 SPARE PARTS LISTING

KEY No.	PART No.	STOCK No.	DESCRIPTION
1	YP900D82-1	98211	Screw ST4.2×14-F (set
2			Brand label
3	YP900D82-3	98212	Side cover
4	YP900D82-4	98213	Screw ST4.2×10
5	YP900D82-5	98214	Baffle
6	YP900D82-6	98215	Spring
8	YP900D82-8	98217	Brush assembly (pair)
10	YP900D82-10	98219	Front handle assembly
17	YP900D82-17	98226	Housing
18	YP900D82-18	98227	Decorative pieces
19	YP900D82-19	98228	Spring φ11.5×φ2×5
20	YP900D82-20	98229	Front plate
21	YP900D82-21	98230	Nut M6
22	YP900D82-22	98231	Rear plate
23	YP900D82-23	98232	Screw ST4.8×16-F
24	YP900D82-24	98233	Screw ST4.2×10-F
25	YP900D82-25	98234	Dust board
26	YP900D82-26	98235	Switch
27	YP900D82-27	98236	Capacitance
28	YP900D82-28	98237	Handle cover
29	YP900D82-29	98238	Screw ST4.2×30-F (set)
30			Label
31	YP900D82-31	98239	Belt cover
32	YP900D82-32	98240	Belt 4PJ246-1
34	YP900D82-34	98242	Belt pulley & bearing assembly
36	YP900D82-36	98244	Middle cover
37	YP900D82-37	98245	Cutter body & bearing
39	YP900D82-39	98247	Windshield
41	YP900D82-41	98249	Stator assembly
43	YP900D82-43	98251	Cable
44	YP900D82-44	98252	Cable protector
45	YP900D82-45	98253	Cable clamp
46	YP900D82-46	98254	Rotor
49	YP900D82-49	98257	Dust bag & spanner assembly
55	YP900D82-55	98263	Parallel guide & rebate depth
			set assembly

KEY No.	PART No.	STOCK No.	DESCRIPTION
			Airframe components
61	YP900D82-61	98258	Blade change fixings (set)
62	YP900D82-62	98259	2 piece blades

Helpline: +44 (0) 23 8049 4344 Sales Desk: +44 (0) 23 8049 4333 General Enquiries: +44 (0) 23 8026 6355 internet: drapertools.com email: sales@drapertools.com

Draper Tools Limited, Hursley Road, Chandler's Ford, Eastleigh, Hampshire. SO53 1YF UK.