GB

DRAPER®

AIR

ANGLE GRINDER

70832 - SFAAAG SPARE PARTS DRAWING

STORM FORCE

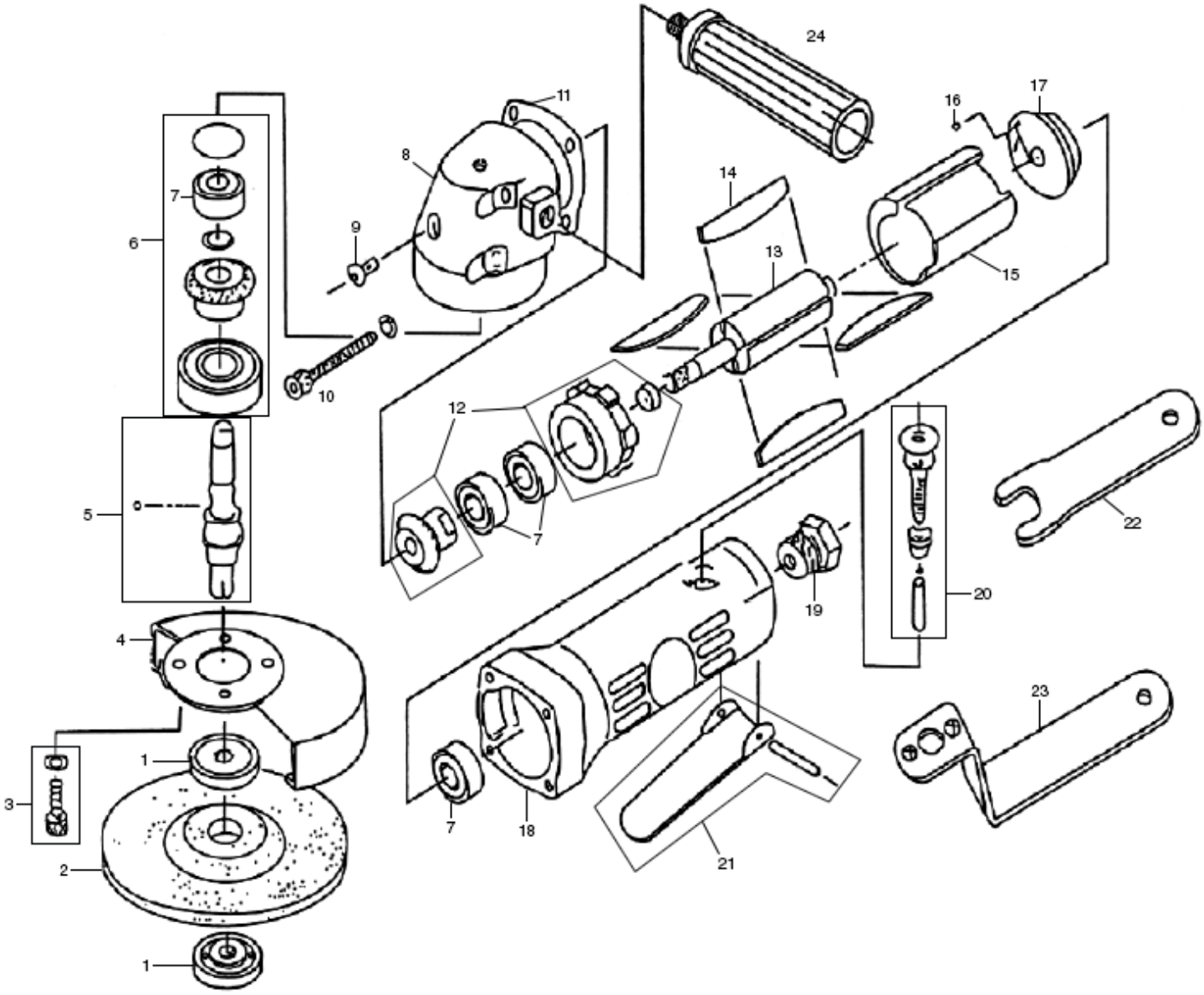

Helpline: +44 (0) 23 8049 4344 Sales Desk: +44 (0) 23 8049 4333 General Enquiries: +44 (0) 23 8026 6355 internet: drapertools.com email: sales@drapertools.com

Draper Tools Limited, Hursley Road, Chandler's Ford, Eastleigh, Hampshire. SO53 1YF UK.

DBCM1119

GB

DRAPER®

AIR

ANGLE GRINDER

70832 - SFAAAG SPARE PARTS LISTING

STORM FORCE

KEY No.	PART No.	STOCK No.	DESCRIPTION
1	YSFAAAG-01	93678	Disc nut x2
2	YSFAAAG-02	93679	Disc wheel
3	YSFAAAG-03	93680	Bolt & spring washer x8 kit
4	YSFAAAG-04	93681	Disc cover
5	YSFAAAG-05	93683	Gear shaft kit
6	YSFAAAG-06	93684	Bevel gear kit
7	YSFAAAG-07	93685	Ball bearing
8	YSFAAAG-08	93687	Angle housing
9	YSFAAAG-09	93688	Screw
10	YSFAAAG-10	93689	Screw x4
11	YSFAAAG-11	93690	Packing
12	YSFAAAG-12	93691	Pinion kit
13	YSFAAAG-13	93692	Rotor
14	YSFAAAG-14	93696	Rotor blade x4
15	YSFAAAG-15	93697	Cylinder
16	YSFAAAG-16	93698	Steel ball
17	YSFAAAG-17	93700	Rear plate
18	YSFAAAG-18	93701	Housing
19	YSFAAAG-19	93706	Air inlet
20	YSFAAAG-20	93707	Valve stem kit
21	YSFAAAG-21	93708	Lever kit
22	YSFAAAG-22	93709	Stop spanner
23	YSFAAAG-23	93711	Disc spanner
24	YSFAAAG-24	93712	Handle

KEY No.	PART No.	STOCK No.	DESCRIPTION

Helpline: +44 (0) 23 8049 4344 Sales Desk: +44 (0) 23 8049 4333 General Enquiries: +44 (0) 23 8026 6355 internet: drapertools.com email: sales@drapertools.com

Draper Tools Limited, Hursley Road, Chandler's Ford, Eastleigh, Hampshire. SO53 1YF UK.