GB

AIR

BODY SAW

70833 - DAT-ABSSG SPARE PARTS DRAWING

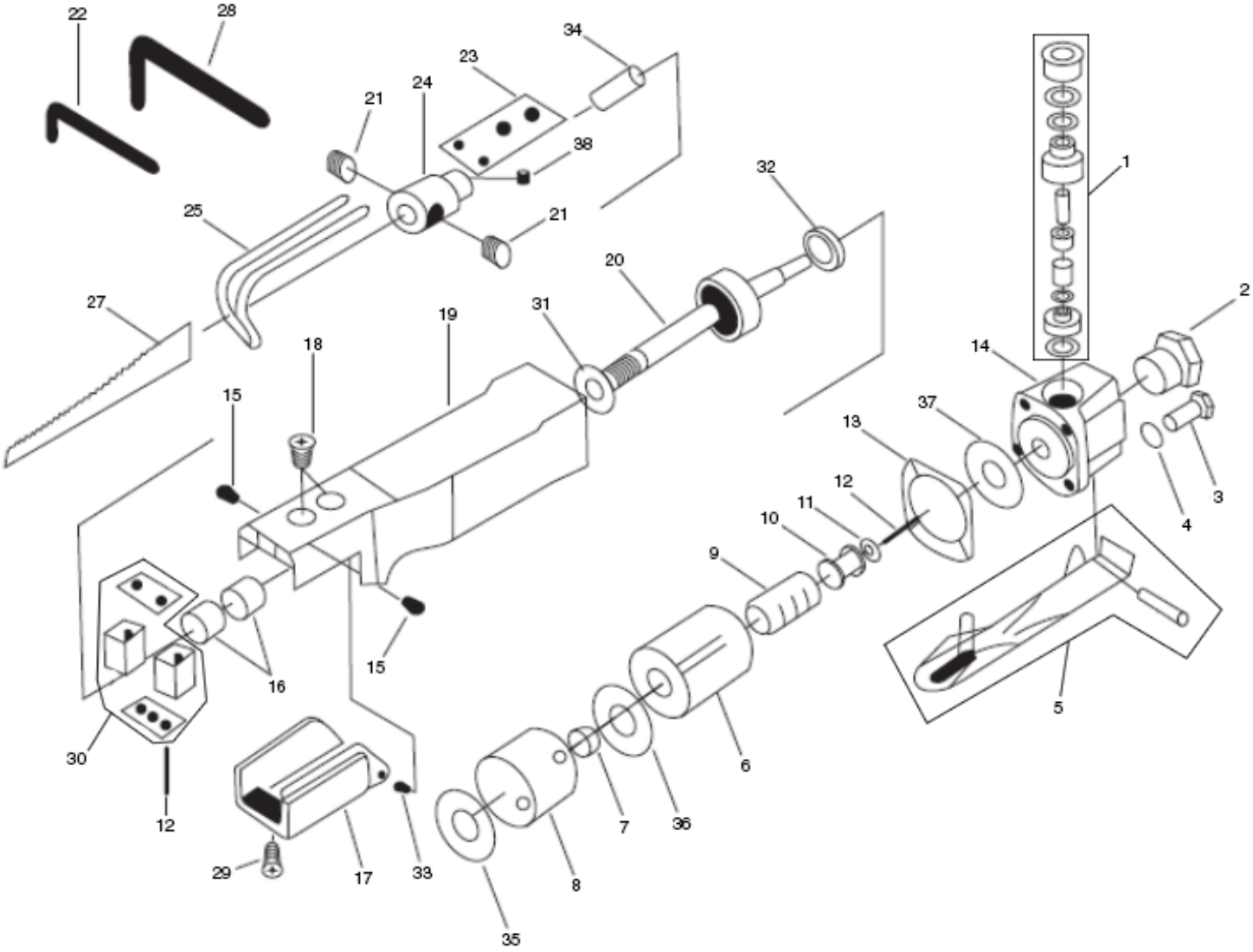

GB

AIR

BODY SAW

70833 - DAT-ABSSG SPARE PARTS LISTING

KEY No.	PART No.	STOCK No.	DESCRIPTION
1	YDAT-ABSSG-1	93595	Air Controller Kit
2	YDAT-ABSSG-2	93596	Inlet Bushing
3	YDAT-ABSSG-3	93597	Cap Screw x4
4	YDAT-ABSSG-4	93598	Washer
5	YDAT-ABSSG-5	93600	Throttle Lever Kit
6	YDAT-ABSSG-6	93602	Valve Case
7	YDAT-ABSSG-7	93603	Bushing
8	YDAT-ABSSG-8	93604	Cylinder
9	YDAT-ABSSG-9	93606	Valve Sleeve
10	YDAT-ABSSG-10	93607	Actuating Valve
11	YDAT-ABSSG-11	93608	Washer
12	YDAT-ABSSG-12	93609	Cap Screw x2
13	YDAT-ABSSG-13	93610	Gasket
14	YDAT-ABSSG-14	93611	Valve Block
15	YDAT-ABSSG-15	93615	Set Screw x2
16	YDAT-ABSSG-16	93618	Bushing x2
17	YDAT-ABSSG-17	93619	Chuck Cover
18	YDAT-ABSSG-18	93620	Screw x2
19	YDAT-ABSSG-19	93621	Housing
20	YDAT-ABSSG-20	93622	Piston Assembly
21	YDAT-ABSSG-21	93623	Set Screw x2
22	YDAT-ABSSG-22	93624	Service Wrench 2mm
23	YDAT-ABSSG-23	93625	Guide Plate
24	YDAT-ABSSG-24	93626	Blade Chuck
25	YDAT-ABSSG-25	93627	Work Guide long
26	YDAT-ABSSG-26	93628	Work Guide short
27	YDAT-ABSSG-27	93629	Blade x6
28	YDAT-ABSSG-28	93630	Service Wrench 4mm
29	YDAT-ABSSG-29	93631	Screw
30	YDAT-ABSSG-30	93632	Blade guide kit
31	YDAT-ABSSG-31	93633	Front Bumper
32	YDAT-ABSSG-32	93634	Rear Bumper x2
33	YDAT-ABSSG-33	93635	Roll Pin
34	YDAT-ABSSG-34	93636	Spring x2
35	YDAT-ABSSG-35	93637	Packing
36	YDAT-ABSSG-36	93638	Packing
37	YDAT-ABSSG-37	93639	Packing
38	YDAT-ABSSG-38	93640	Set Screw

KEY No.	PART No.	STOCK No.	DESCRIPTION

Helpline: +44 (0) 23 8049 4344 Sales Desk: +44 (0) 23 8049 4333 General Enquiries: +44 (0) 23 8026 6355 internet: drapertools.com email: sales@drapertools.com

Draper Tools Limited, Hursley Road, Chandler's Ford, Eastleigh, Hampshire. SO53 1YF UK.