GB

230V

BOOSTER PUMP

98916 - BP4 SPARE PARTS DRAWING

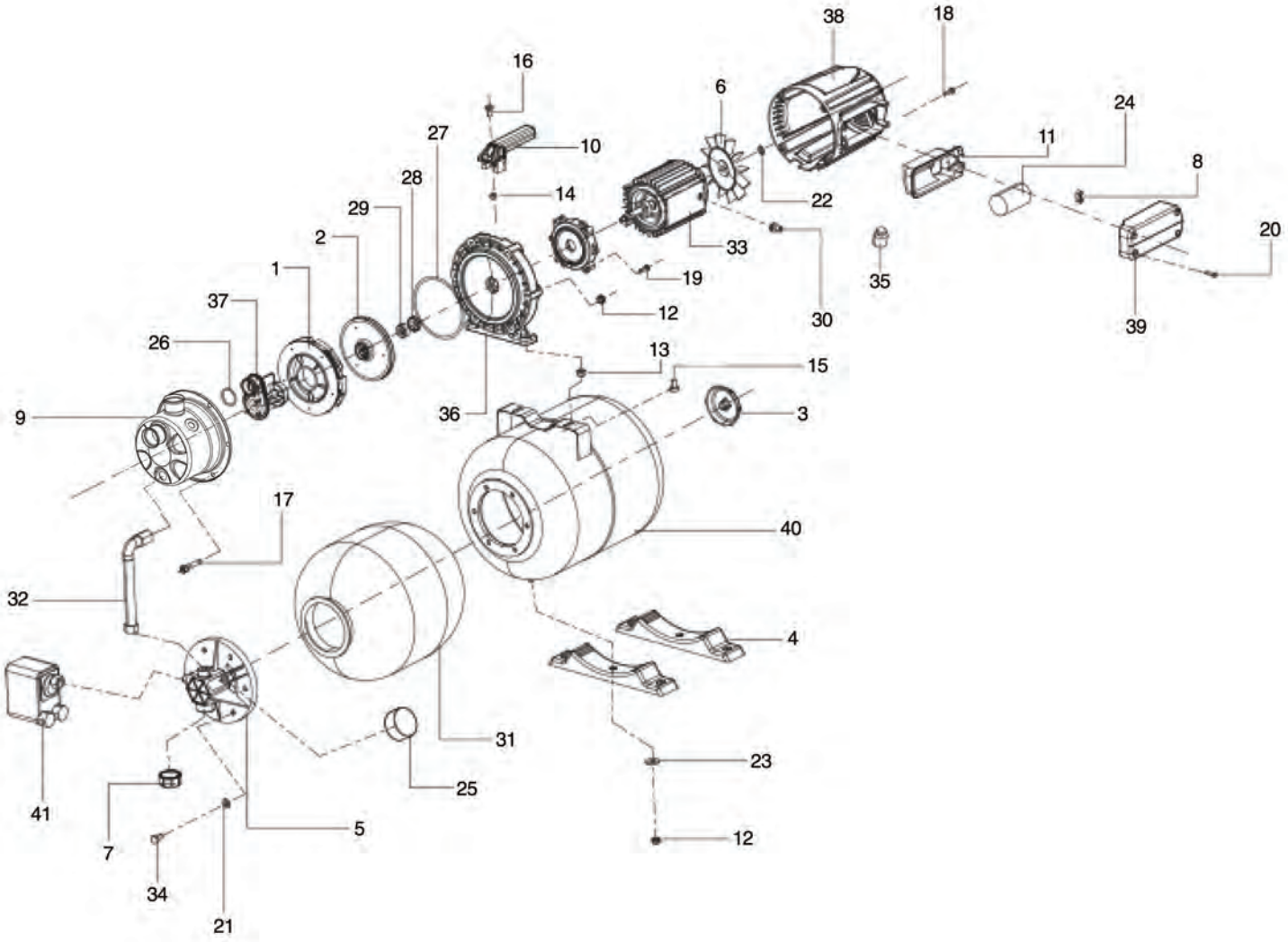

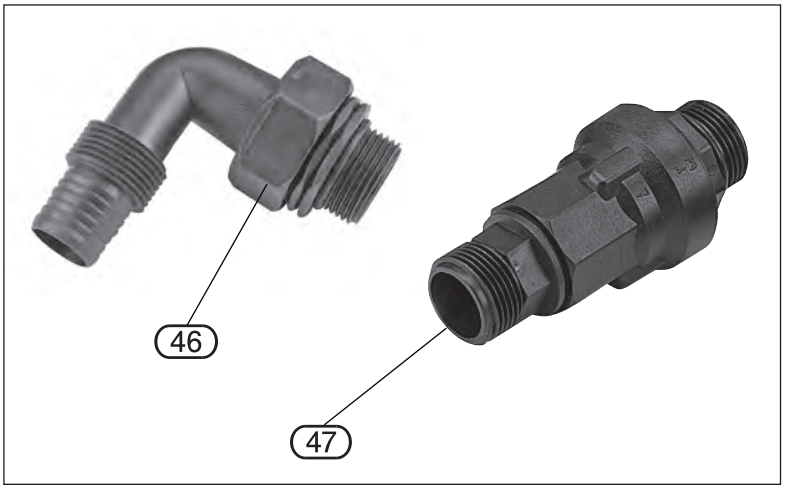

GB

DRAPER®

230V

BOOSTER PUMP

98916 - BP4 SPARE PARTS LISTING

KEY No.	PART No.	STOCK No.	DESCRIPTION
1	Y-BP4-01	70703	DIFFUSER
2	Y-BP4-02	70704	IMPELLER
3	Y-BP4-03	70705	TANK TAIL COVER
4	Y-BP4-04	70706	TANK FOOT
5	Y-BP4-05	70707	PLASTIC TANK FLANGE
6	Y-BP4-06	70709	FAN BLADE
7	Y-BP4-07	70710	PLASTIC NUT
8	Y-BP4-08	70711	PRESSING BLOCK
9	Y-BP4-09	70715	PUMP HEAD
10	Y-BP4-10	70716	HANDLE
11	Y-BP4-11	70717	CAPACITOR BOX
12	Y-BP4-12	70718	LOCKNUT
13	Y-BP4-13	70719	NUT
14	Y-BP4-14	70722	NUT
15	Y-BP4-15	70723	SCREW
16	Y-BP4-16	70724	SCREW
17	Y-BP4-17	70725	SCREW
18	Y-BP4-18	70735	SCREW
19	Y-BP4-19	70736	SCREW
20	Y-BP4-20	70737	SCREW
21	Y-BP4-21	70738	GALVANIZED SMALL FLAT PAD
22	Y-BP4-22	70739	SNAP SPRING
23	Y-BP4-23	70740	GALVANIZED WASHER
24	Y-BP4-24	70741	CAPACITOR
25	Y-BP4-25	70744	PRESSURE GAUGE
26	Y-BP4-26	70745	DRAFT TUBE SEAL
27	Y-BP4-27	70751	MAIN SEAL
28	Y-BP4-28	70752	MECHANICAL SEAL STATIC RING
29	Y-BP4-29	70753	MECHANICAL SEAL MOVING RING
30	Y-BP4-30	70757	MOTOR OUTLET SEAL
31	Y-BP4-31	70758	INNER TANK
32	Y-BP4-32	70759	FLEXIBLE PIPE
33	Y-BP4-33	70761	MOTOR
34	Y-BP4-34	70798	SCREW
35	Y-BP4-35	70799	MACHINE MAT
36	Y-BP4-36	70800	MIDDLE PART
37	Y-BP4-37	70801	DRAFT TUBE
38	Y-BP4-38	70803	MAIN HOUSING
39	Y-BP4-39	70804	SWITCH BOX WITH SILK PRINT
40	Y-BP4-40	70805	PRESSURE TANK
41	Y-BP4-41	70822	PRESSURE SWITCH

KEY No.	PART No.	STOCK No.	DESCRIPTION
46	Y-BP3-21	41560	OUTLET ELBOW ADAPTER
47	Y-BP3-22	41522	NON RETURN VALVE ADAPTER

Helpline: +44 (0) 23 8049 4344 Sales Desk: +44 (0) 23 8049 4333 General Enquiries: +44 (0) 23 8026 6355 internet: drapertools.com email: sales@drapertools.com

Draper Tools Limited, Hursley Road, Chandler's Ford, Eastleigh, Hampshire. SO53 1YF UK