230V

CEMENT MIXER

GB

99511 - CMI170 SPARE PARTS DRAWING

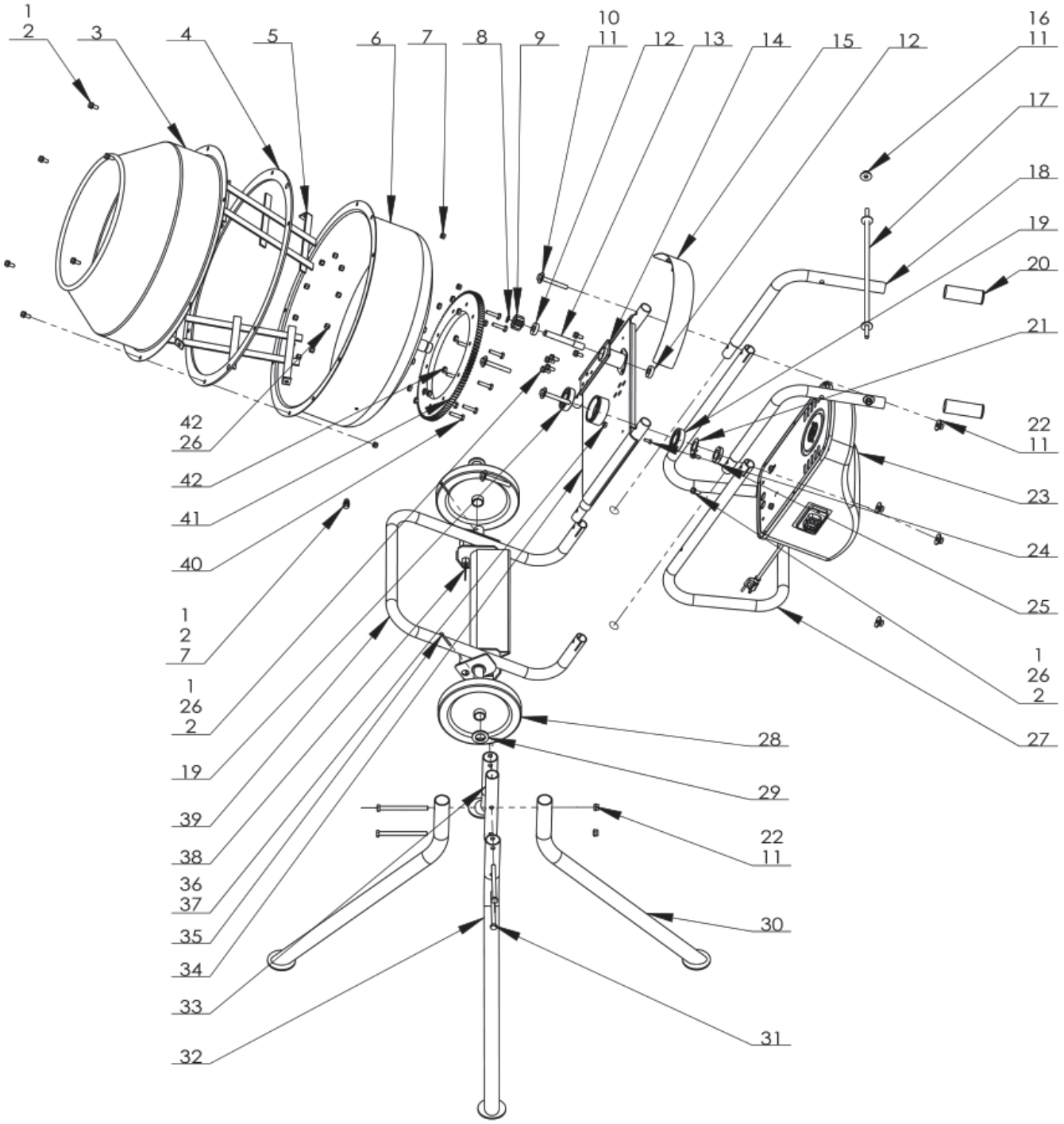

230V

CEMENT MIXER

GB

99511 - CMI170 SPARE PARTS LISTING

KEY No.	PART No.	STOCK No.	DESCRIPTION
1	Y-CMI170-01	99524	SCREW M8 X 20
2	Y-CMI170-02	99525	WASHER M8
3	Y-CMI170-03	99526	UPPER DRUM
4	Y-CMI170-04	99527	DRUM GASKET
5	Y-CMI170-05	99528	MIXING BLADE
6	Y-CMI170-06	99529	LOWER DRUM
7	Y-CMI170-07	99530	SCREW M8
8	Y-CMI170-08	99531	WASHER M14
9	Y-CMI170-09	99532	SMALL GEAR
10	Y-CMI170-10	99533	SCREW M10X70
11	Y-CMI170-11	99534	WASHER M10
12	Y-CMI170-12	99535	BEARING 6002
13	Y-CMI170-13	99536	SHAFT
14	Y-CMI170-14	99537	BEARING BLOCK
15	Y-CMI170-15	99538	GEAR COVER
16	Y-CMI170-16	99539	SCREW M10
17	Y-CMI170-17	99540	SHAFT
18	Y-CMI170-18	99541	HANDLE PIPE
19	Y-CMI170-19	99542	BEARING 6206
20	Y-CMI170-20	99543	HANDLE
21	Y-CMI170-11	99534	WASHER M10
22	Y-CMI170-16	99539	SCREW M10
23	Y-CMI170-23	99544	MOTOR BOX
24	Y-CMI170-24	99545	SCREW M6X15
25	Y-CMI170-25	99546	NUT M27
26	Y-CMI170-02	99525	WASHER M8
27	Y-CMI170-27	99547	STAND PIPE
28	Y-CMI170-28	99548	WHEEL
29	Y-CMI170-29	99549	WASHER M25
30	Y-CMI170-30	99550	STAND LEG A
31	Y-CMI170-31	99551	SCREW M10X130
32	Y-CMI170-32	99552	STAND LEG B
33	Y-CMI170-33	99553	SHAFT
34	Y-CMI170-34	99554	BOX PLATE
35	Y-CMI170-35	99555	COTTER PIN M5X40
36	Y-CMI170-36	99556	SCREW M6
37	Y-CMI170-37	99557	WASHER M6
38	Y-CMI170-38	99558	SPACER PIN
39	Y-CMI170-39	99559	WHEEL STAND
40	Y-CMI170-40	99560	SCREW M8X35
41	Y-CMI170-41	99561	GEAR RING

KEY No.	PART No.	STOCK No.	DESCRIPTION
42	Y-CMI170-42	99562	NUT M8

Helpline: +44 (0) 23 8049 4344 Sales Desk: +44 (0) 23 8049 4333 General Enquiries: +44 (0) 23 8026 6355 internet: drapertools.com email: sales@drapertools.com

Draper Tools Limited, Hursley Road, Chandler's Ford, Eastleigh, Hampshire. SO53 1YF UK.