# 130A ARC WELDER

## 53084 – AW135T SPARE PARTS DRAWING

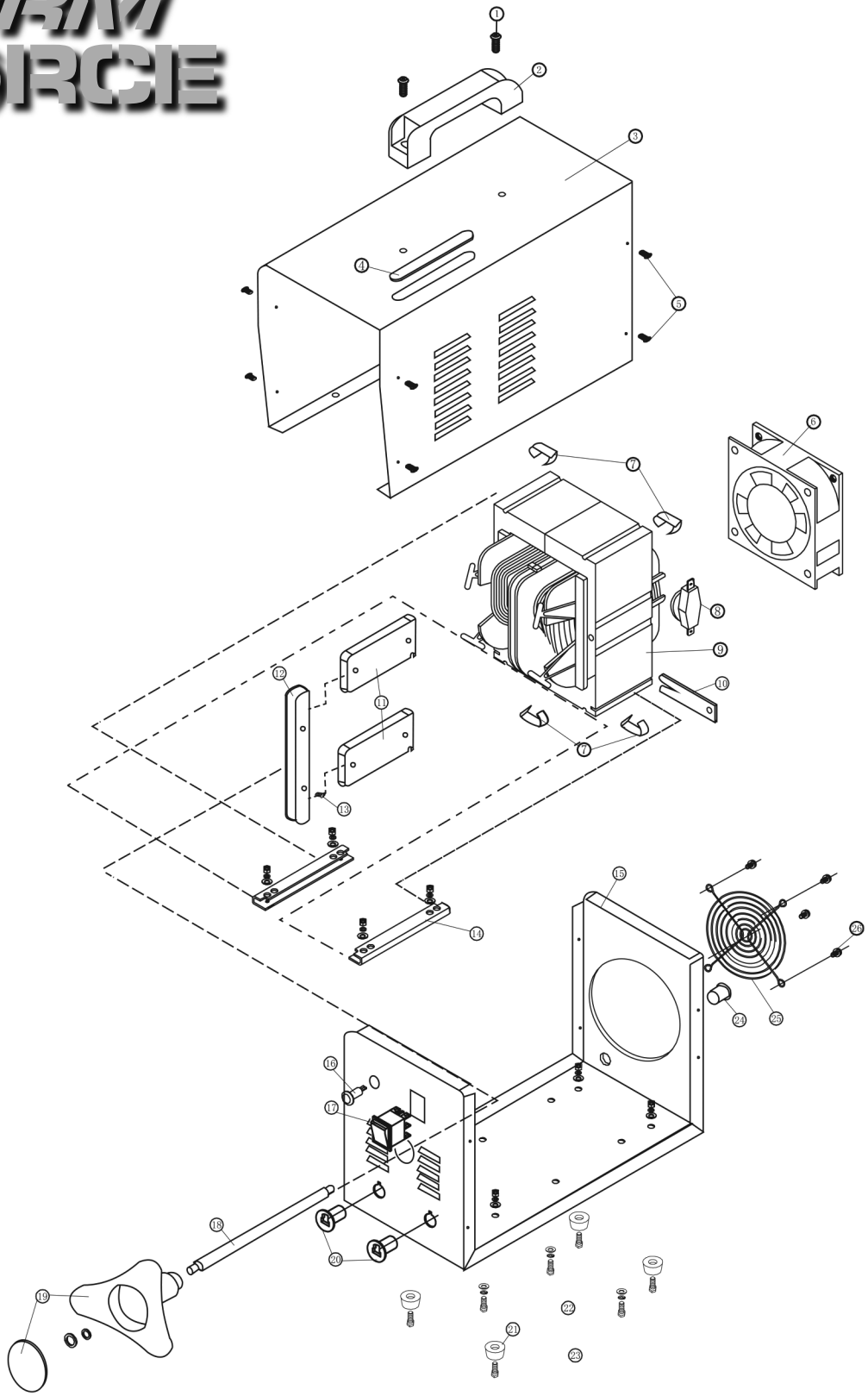

DRAPER®

GB

# 130A ARC WELDER

## 53084 – AW135T SPARE PARTS LISTING

STORM FORCE

| KEY No. | PART No. | STOCK No. | DESCRIPTION |
|---|---|---|---|
| 1 | Y-AW105T-01 | 54865 | Handle screw |
| 2 | Y-AW105T-02 | 77005 | Handle |
| 3 | Y-AW135T-03 | 54913 | Case upper |
| 4 | Y-AW105T-04 | 77029 | Viewing lens |
| 5 | Y-AW105T-05 | 54891 | Screw |
| 6 | Y-AW105T-06 | 77053 | Fan |
| 7 | Y-AW105T-07 | 77064 | Spring clip (x4) |
| 8 | Y-AW105T-08 | 77107 | Thermal protection |
| 9 | Y-AW135T-09 | 54914 | Transformer |
| 10 | Y-AW105T-10 | 77183 | Insert spring |
| 11 | Y-AW105T-11 | 54899 | Moving iron |
| 12 | Y-AW105T-12 | 77235 | Upper bracket |
| 13 | Y-AW105T-13 | 54900 | Upper bracket screw |
| 14 | Y-AW105T-14 | 77237 | Bottom bracket (x2) |
| 15 | Y-AW105T-15 | 54901 | Case base |
| 16 | Y-AW105T-16 | 77239 | Power on lamp |
| 17 | Y-AW105T-17 | 77241 | Power switch |
| 18 | Y-AW105T-18 | 54904 | Threaded adjuster |
| 19 | Y-AW105T-19 | 77399 | Triangular knob |
| 20 | Y-AW105T-20 | 77506 | Cable gland |
| 21 | Y-AW105T-21 | 77563 | Rubber foot set of 4 |
| 22 | Y-AW105T-22 | 54908 | screw |
| 23 | Y-AW105T-23 | 54909 | Spacer |
| 24 | Y-AW105T-24 | 54910 | Cable gland |
| 25 | Y-AW105T-25 | 54911 | Fan cover |
| 26 | Y-AW105T-26 | 54912 | Fan cover screw |

| KEY No. | PART No. | STOCK No. | DESCRIPTION |
|---|---|---|---|
| | | | |

Helpline: +44 (0) 23 8049 4344 Sales Desk: +44 (0) 23 8049 4333 General Enquiries: +44 (0) 23 8026 6355 internet: drapertools.com email: sales@drapertools.com

Draper Tools Limited, Hursley Road, Chandler's Ford, Eastleigh, Hampshire. SO53 1YF UK.